3.0 MONORAIL MR

SCHNEEBERGER LINEAR TECHNOLOGY

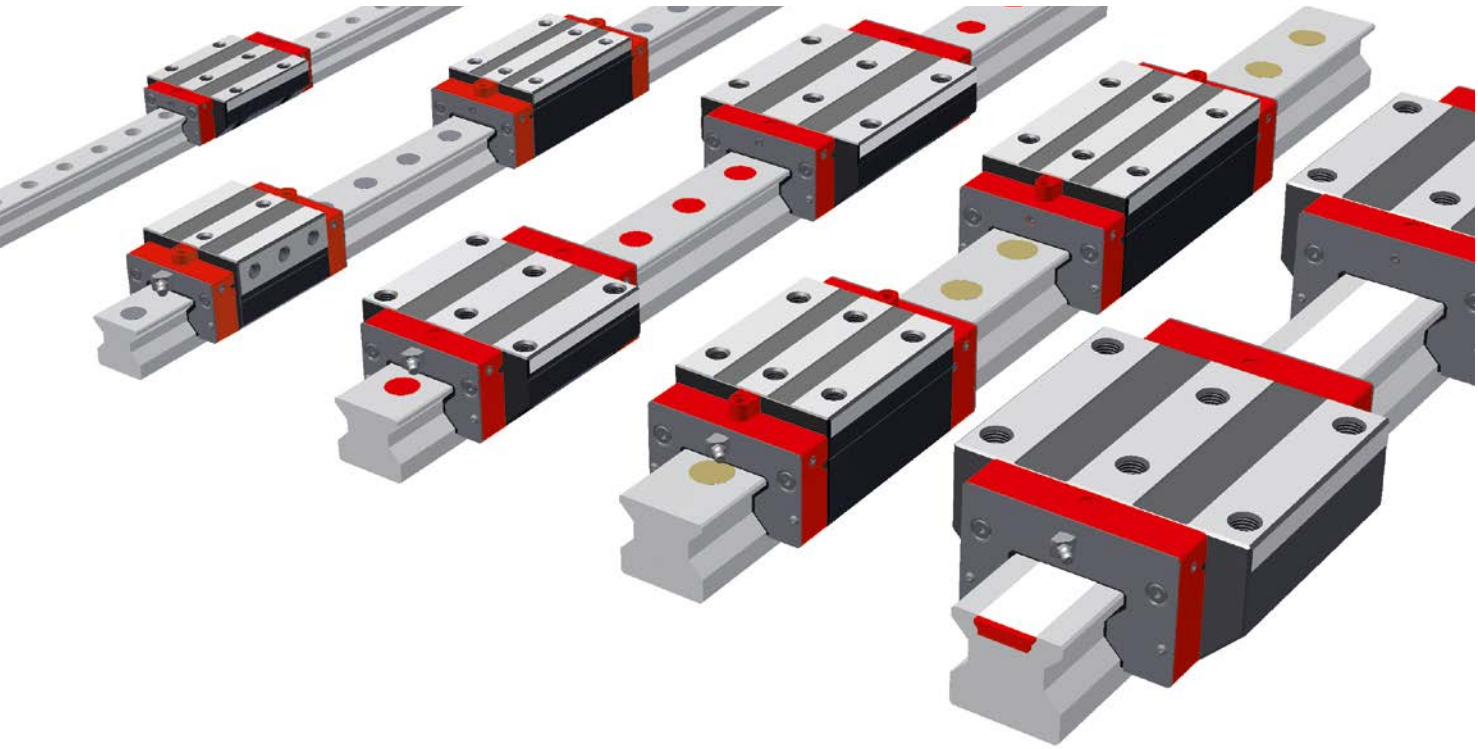

Exceptional rigidity, high dynamic and static load-carrying capacities, outstanding smooth running and a fully sealed carriage are the main features of the MONORAIL MR Roller Guideway. Specifically designed for machine tools, these properties result in higher machining rates plus enhanced geometrical accuracy and surface quality of the machined component. The exceptional all-round rigidity of the products and the method of connection with the surrounding structure provide improved vibration behaviour at lower amplitudes therefore extending tool life.
The MONORAIL MR 4S carriages have a new design. The product remains compatible as a complete system (carriage and guideway). Carriages in the 4S design, as well as previous carriage designs, can be operated on the guide rails, which have remained unchanged by the new carriage design. The accessories have been modified and can be used for 4S carriages as well as previous carriage designs. Underpinned by key design changes such as new redirection units (gray) for low-pulsation running, improved lubricant distribution with less leakage, a more robust front plate with stainless steel plates and with four screw fastenings, replaceable cross wipers, and optimized longitudinal and cross wipers for even better sealing.

Features of System MONORAIL MR

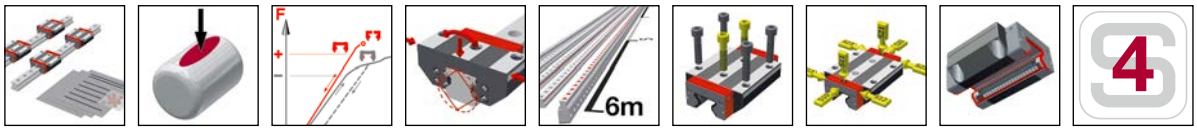

Details see chapter 1

Page number

3.1 Overview of types, sizes and available options 38

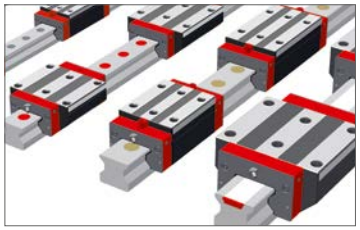

Product overview MR Rails 38
Product overview MR Carriages 39

3.2 Technical data and options 40

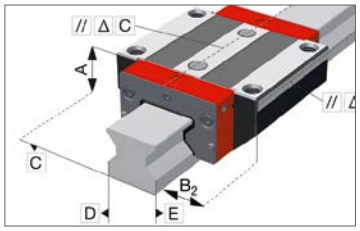

MR Buildsize 25 40
MR Buildsize 30 42
MR Buildsize 35 44
MR Buildsize 45 46
MR Buildsize 55 48
MR Buildsize 65 50
MR Buildsize 100 52

3.3 Accessories MONORAIL MR 54

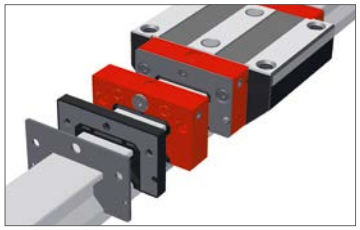

Accessories overview 54
MR Rails accessory details 55
MR Carriages accessory details 58

3.4 Order key 61

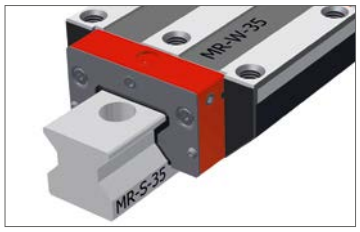

Order key MR Rails 61
Order key MR Carriages 61

Product overview MR Rails

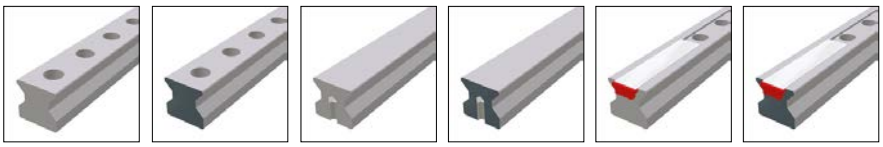

Buildsizes / Rail build forms	N standard	ND standard, through hardened	NU with tapped holes at the bottom	NUD with tapped holes, through hardened	C for cover strip	CD for cover strip, through hardened
Size 25	MR S 25-N	MR S 25-ND	MR S 25-NU		MR S 25-C	MR S 25-CD
Size 30	MR S 30-N		MR S 30-NU			
Size 35	MR S 35-N	MR S 35-ND	MR S 35-NU	MR S 35-NUD	MR S 35-C	
Size 45	MR S 45-N	MR S 45-ND	MR S 45-NU		MR S 45-C	
Size 55	MR S 55-N		MR S 55-NU		MR S 55-C	
Size 65	MR S 65-N		MR S 65-NU		MR S 65-C	
Size 100	MR S 100-N					
Features						
Screwable from above	●	●			●	●
Screwable from below			●	●		
Small assembly effort			●	●	●	●
Great single-part system length	●		●		●	
Usable for bombardment with metal chips				●		
For the support of metal covers		●		●		

Available options for MR Rails

Details see chapter 2

Accuracy

- G0 Highly accurate
- G1 Very accurate
- G2 Accurate
- G3 Standard

Straightness

- KC Standard

Reference side

- R1 Ref. at bottom
- R2 Ref. on top

Coating

- CN None
- CH Hard chromium

Available accessories for MR Rails

Details see chapter 3.3

Plugs

Cover strips

Assembly tools

3.1 Overview of types, sizes and available options

MR Carriages

Product overview MR Carriages

Buildsizes / Carriage build forms	A standard	B standard, long	C compact, high	D compact, high, long	E compact, high, for lateral fixation	F compact	G compact, long
Size 25	MR W 25-A	MR W 25-B	MR W 25-C	MR W 25-D	MR W 25-E	MR W 25-F	MR W 25-G
Size 30	MR W 30-A	MR W 30-B	MR W 30-C	MR W 30-D		MR W 30-F	MR W 30-G
Size 35	MR W 35-A	MR W 35-B	MR W 35-C	MR W 35-D	MR W 35-E		
Size 45	MR W 45-A	MR W 45-B	MR W 45-C	MR W 45-D		MR W 45-F	
Size 55	MR W 55-A	MR W 55-B	MR W 55-C	MR W 55-D			MR W 55-G
Size 65	MR W 65-A	MR W 65-B	MR W 65-C	MR W 65-D			
Size 100	MR W 100-A	MR W 100-B					
Features							
Screwable from above	●	●	●	●		●	●
Screwable from below	●	●					
Screwable from the side					●		
For high loads and moments		●		●			●
For medium loads and moments	●		●		●	●	
For limited installation space						●	●

Available options for MR Carriages

Details see chapter 2

Accuracy

- G0 Highly accurate
- G1 Very accurate
- G2 Accurate
- G3 Standard

Load

- V1 Low
- V2 Medium
- V3 High

Reference side

- R1 Ref. at bottom
- R2 Ref. on top

Coating

- CN None
- CH Hard chromium

Lube connections

- S10 Left center
- S20 Right center
- S11 Top left
- S21 Top right
- S12 Lower left side
- S22 Lower right side
- S13 Upper left side
- S23 Upper right side
- S32 Left side
- S42 Right side

Lubrication

- LN
- LG Oil protect
- LV Grease protect
- Full greasing

Available accessories for MR Carriages

Details see chapter 3.3 and 2.1

Additional wipers
Front plates
Bellows
Lube nippels
Assembly rails
Lube adapters
Lubrication plates

MR S 25 Drawings

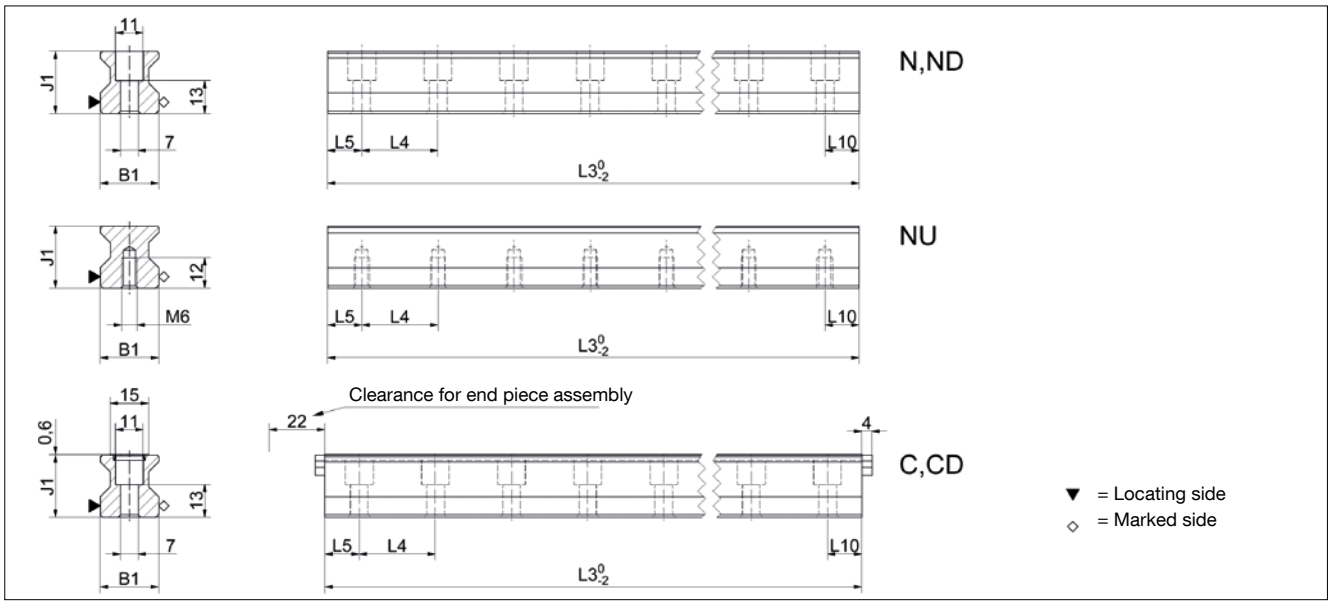

MR W 25 Drawings

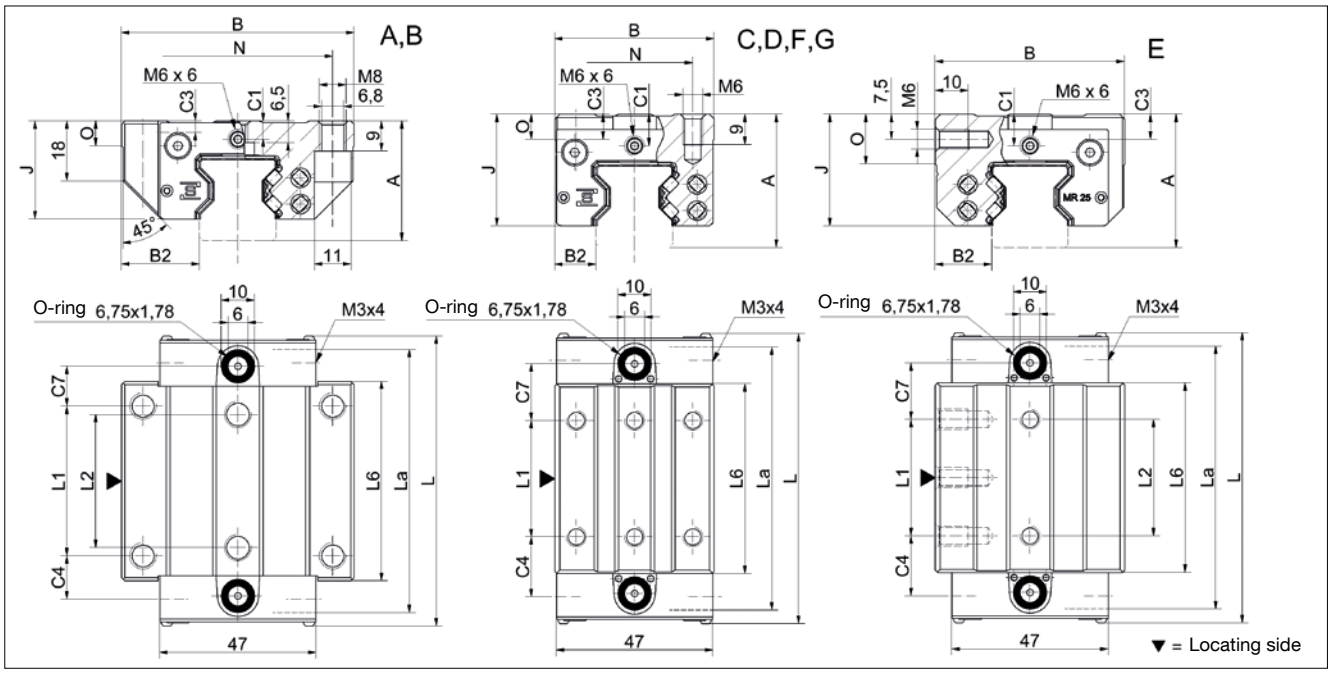

MR W 25 Rigidity diagram

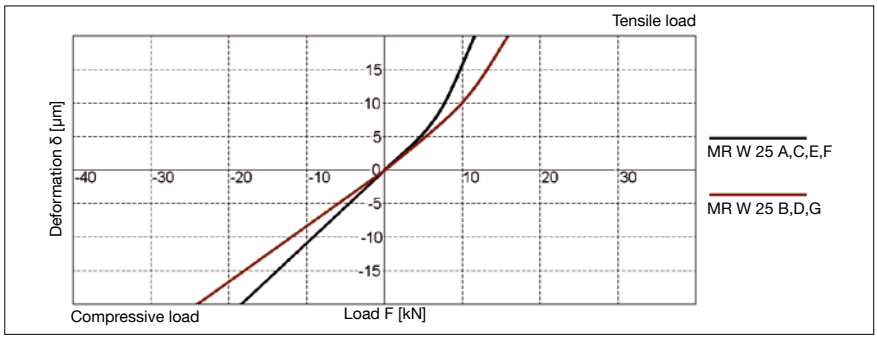

MR W 25 Load rating

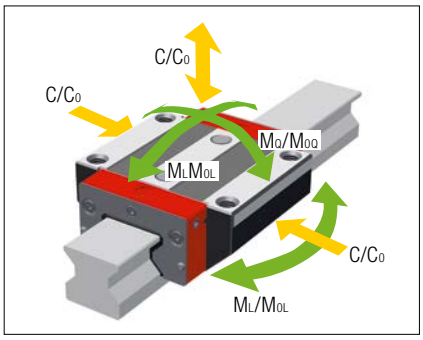

MR S 25 Dimensions

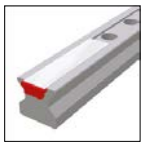
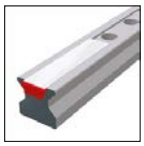

	MR S 25-N	MR S 25-ND	MR S 25-NU	MR S 25-C	MR S 25-CD		
B1: Rail width	23	23	23	23	23		
J1: Rail height	24.5	24.5	24.5	24.5	24.5		
L3: Rail length max.	6000	1500	6000	3000	1500		
L4: Spacing of fixing holes	30	30	30	30	30		
L5/L10:Position of first/last fixing hole	13.5	13.5	13.5	13.5	13.5		
Gew.: Rail weight, specific (kg/m)	3.4	3.4	3.8	3.3	3.3		

Available options for MR S 25

MR W 25 Dimensions and capacities

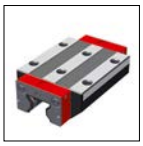

	MR W 25-A	MR W 25-B	MR W 25-C	MR W 25-D	MR W 25-E	MR W 25-F	MR W 25-G
A: System height	36	36	40	40	40	36	36
B: Carriage width	70	70	48	48	57	48	48
B2: Distance between locating faces	23.5	23.5	12.5	12.5	17	12.5	12.5
C1: Position of center front lube hole	5.5	5.5	9.5	9.5	9.5	5.5	5.5
C3: Position of lateral lube hole	-	-	-	-	-	-	-
C4: Position of lateral lube hole	-	-	-	-	-	-	-
C7: Position of top lube hole	12	23.2	17	20.7	17	17	20.7
J: Carriage height	29.5	29.5	33.5	33.5	33.5	29.5	29.5
L: Carriage length	88	110	88	110	88	88	110
La: Cross wiper spacing*	83	106	83	106	83	83	106
L1: Exterior fixing hole spacing	45	45	35	50	35	35	50
L2: Interior fixing hole spacing	40	40	-	-	35	-	-
L6: Steel body length	60	79.4	57	79.4	57	57	79.4
N: Lateral fixing hole spacing	57	57	35	35	-	35	35
O: Reference face height	7.5	7.5	7.5	7.5	15	7.5	7.5
Capacities and weights							
C0: Static load capacitiy (N)	49800	70300	49800	70300	49800	49800	70300
C100: Dynamic load capacity (N)	27700	39100	27700	39100	27700	27700	39100
M0Q: Static cross moment capacity (Nm)	733	1035	733	1035	733	733	1035
M0L: Static longitud. moment capacity (Nm)	476	936	476	936	476	476	936
MQ: Dyn. cross moment capacity (Nm)	408	576	408	576	408	408	576
ML: Dyn. longitud. moment capacity (Nm)	265	521	265	521	265	265	521
Gew: Carriage weight (kg)	0.7	0.9	0.6	0.7	0.7	0.5	0.6

Note: *Required to determine the rail length from the projected travel distance

Available options for MR W 25

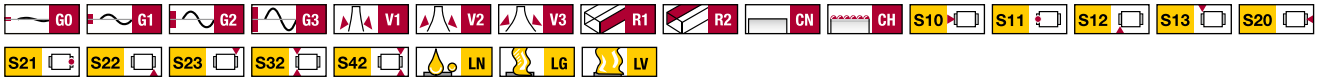

MR S 30 Drawings

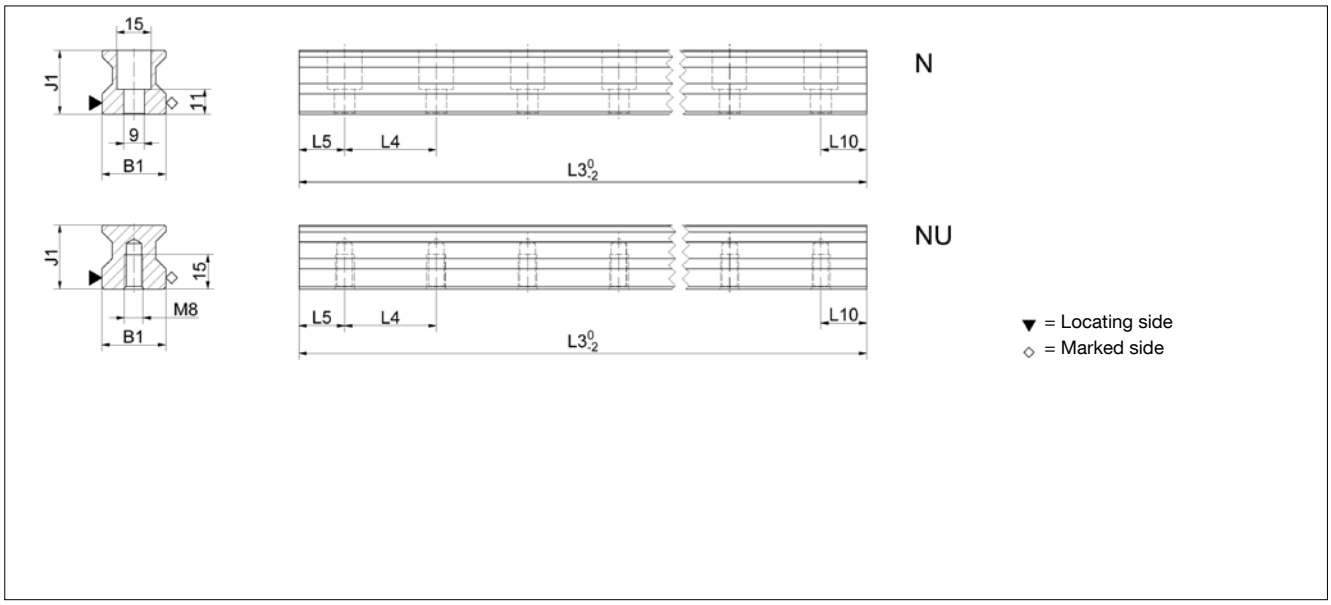

MR W 30 Drawings

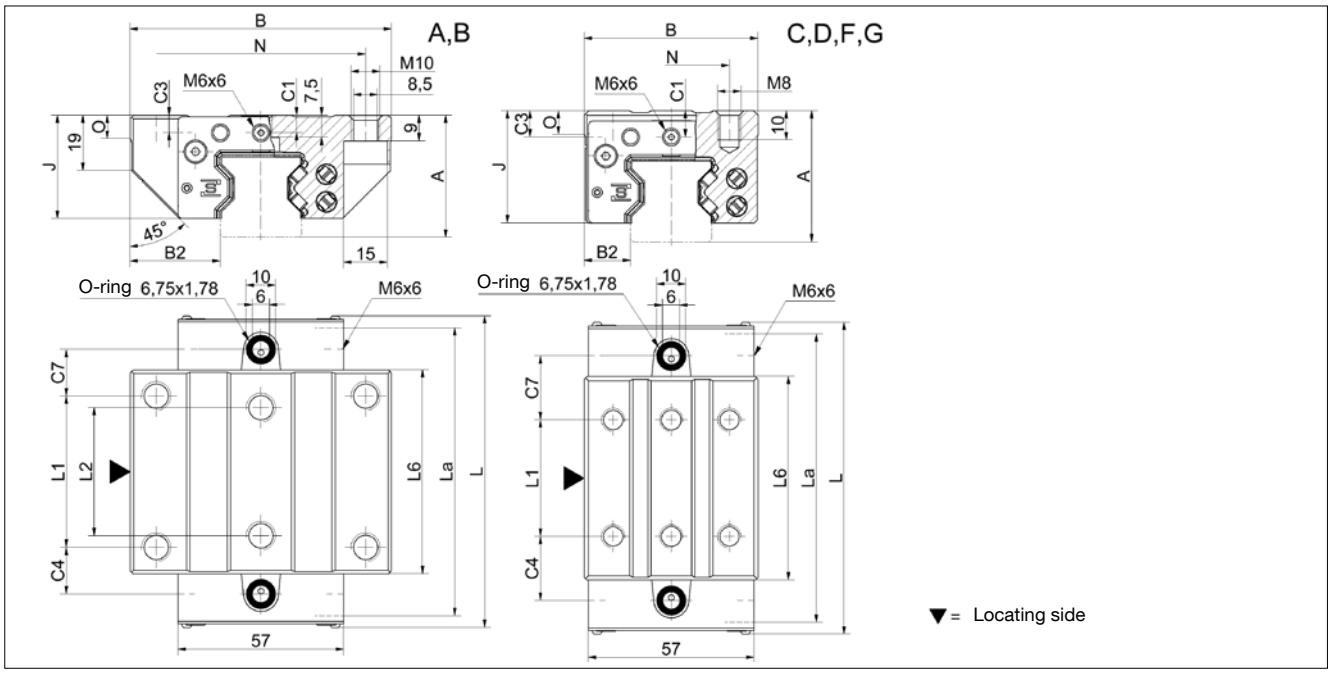

MR W 30 Rigidity diagram

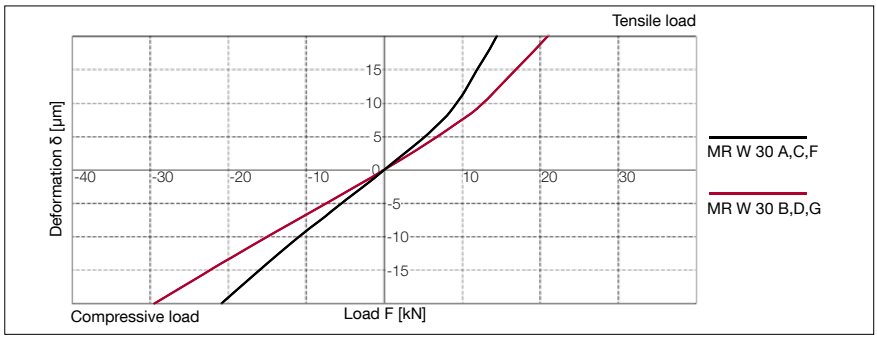

MR W 30 Load rating

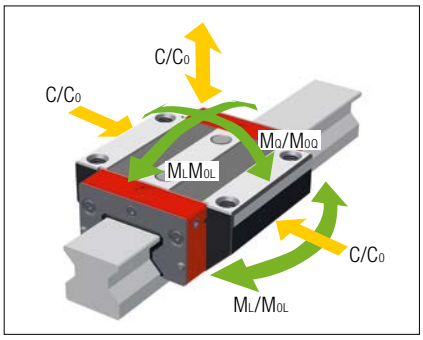

MR S 30 Dimensions

	MR S 30-N	MR S 30-NU					
B1: Rail width	28	28					
J1: Rail height	28	28					
L3: Rail length max.	6000	6000					
L4: Spacing of fixing holes	40	40					
L5/L10:Position of first/last fixing hole	18.5	18.5					
Gew.: Rail weight, specific (kg/m)	4.6	5.2					

Available options for MR S 30

MR W 30 Dimensions and capacities

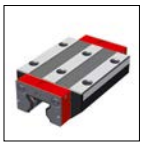

	MR W 30-A	MR W 30-B	MR W 30-C	MR W 30-D	MR W 30-F	MR W 30-G	
A: System height	42	42	45	45	42	42	
B: Carriage width	90	90	60	60	60	60	
B2: Distance between locating faces	31	31	16	16	16	16	
C1: Position of center front lube hole	6	6	9	9	6	6	
C3: Position of lateral lube hole	6	6	9	9	6	6	
C4: Position of lateral lube hole	16	26.5	22	22.5	22	22.5	
C7: Position of top lube hole	16	26.5	22	22.5	22	22.5	
J: Carriage height	35.5	35.5	38.5	38.5	35.5	35.5	
L: Carriage length	108	129	108	129	108	129	
La: Cross wiper spacing*	103	124	103	124	103	124	
L1: Exterior fixing hole spacing	52	52	40	60	40	60	
L2: Interior fixing hole spacing	44	44	-	-	-	-	
L6: Steel body length	70	91	70	91	70	91	
N: Lateral fixing hole spacing	72	72	40	40	40	40	
O: Reference face height	8	8	8	8	8	8	
Capacities and weights							
C0: Static load capacitiy (N)	74900	98500	74900	98500	74900	98500	
C100: Dynamic load capacity (N)	39500	48900	39500	48900	39500	48900	
M0Q: Static cross moment capacity (Nm)	1332	1751	1332	1751	1332	1751	
M0L: Static longitud. moment capacity (Nm)	966	1614	966	1614	966	1614	
MQ: Dyn. cross moment capacity (Nm)	702	869	702	869	702	869	
ML: Dyn. longitud. moment capacity (Nm)	510	801	510	801	510	801	
Gew: Carriage weight (kg)	1.1	1.5	0.9	1.2	0.8	1.0	

Note: *Required to determine the rail length from the projected travel distance

Available options for MR W 30

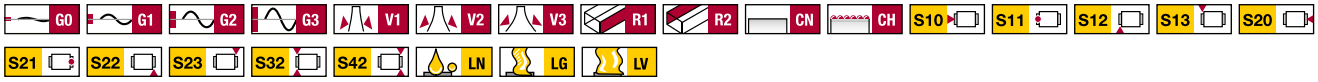

MR S 35 Drawings

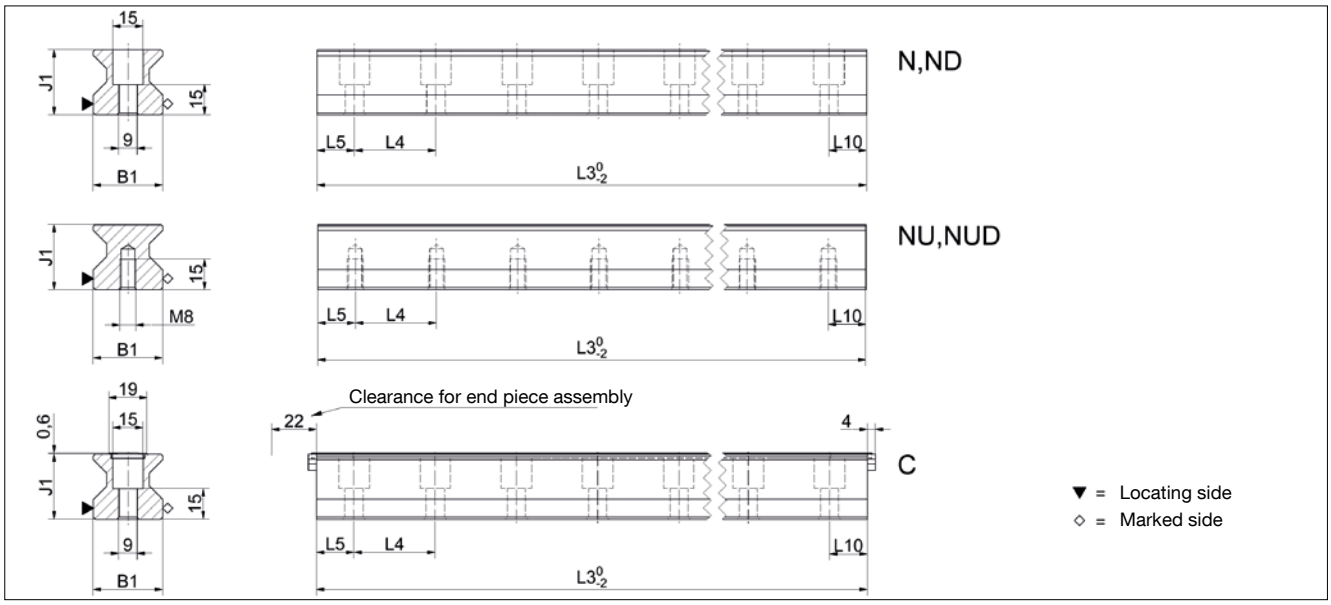

MR W 35 Drawings

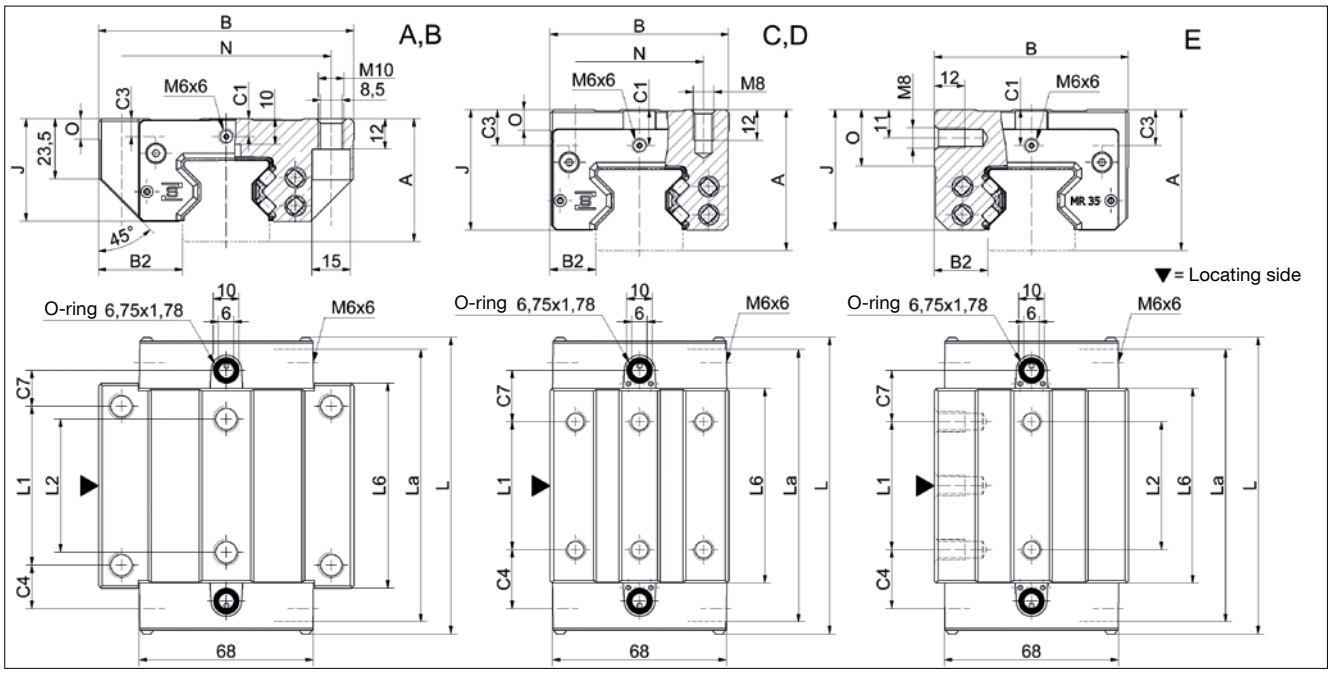

MR W 35 Rigidity diagram

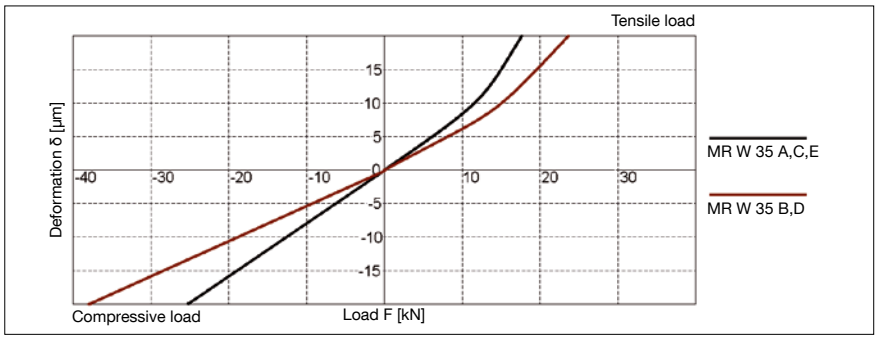

MR W 35 Load rating

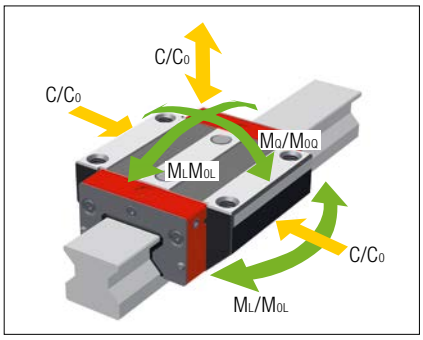

MR S 35 Dimensions

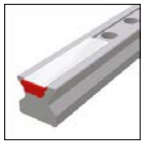

	MR S 35-N	MR S 35-ND	MR S 35-NU	MR S 35-NUD	MR S 35-C
B1: Rail width	34	34	34	34	34
J1: Rail height	32	32	32	32	32
L3: Rail length max.	6000	1500	6000	1500	6000
L4: Spacing of fixing holes	40	40	40	40	40
L5/L10:Position of first/last fixing hole	18.5	18.5	18.5	18.5	18.5
Gew.: Rail weight, specific (kg/m)	6.5	6.5	7.1	7.1	6.3

Available options for MR S 35

MR W 35 Dimensions and capacities

	MR W 35-A	MR W 35-B	MR W 35-C	MR W 35-D	MR W 35-E
A: System height	48	48	55	55	55
B: Carriage width	100	100	70	70	76
B2: Distance between locating faces	33	33	18	18	21
C1: Position of center front lube hole	7	7	14	14	14
C3: Position of lateral lube hole	7	7	14	14	14
C4: Position of lateral lube hole	17	30.5	23	25.5	23
C7: Position of top lube hole	14	27.5	20	22.5	20
J: Carriage height	40	40	47	47	47
L: Carriage length	116	143	116	143	116
La: Cross wiper spacing*	111	138	111	138	111
L1: Exterior fixing hole spacing	62	62	50	72	50
L2: Interior fixing hole spacing	52	52	-	-	50
L6: Steel body length	80	103	76	103	76
N: Lateral fixing hole spacing	82	82	50	50	-
O: Reference face height	8	8	8	8	22
Capacities and weights					
C0: Static load capacitiy (N)	93400	128500	93400	128500	93400
C100: Dynamic load capacity (N)	52000	71500	52000	71500	52000
M0Q: Static cross moment capacity (Nm)	2008	2762	2008	2762	2008
M0L: Static longitud. moment capacity (Nm)	1189	2214	1189	2214	1189
MQ: Dyn. cross moment capacity (Nm)	1118	1537	1118	1537	1118
ML: Dyn. longitud. moment capacity (Nm)	662	1232	662	1232	662
Gew: Carriage weight (kg)	1.6	2.2	1.5	2.0	1.8

Note: *Required to determine the rail length from the projected travel distance

Available options for MR W 35

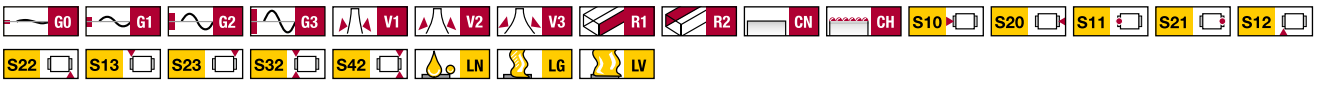

MR S 45 Drawings

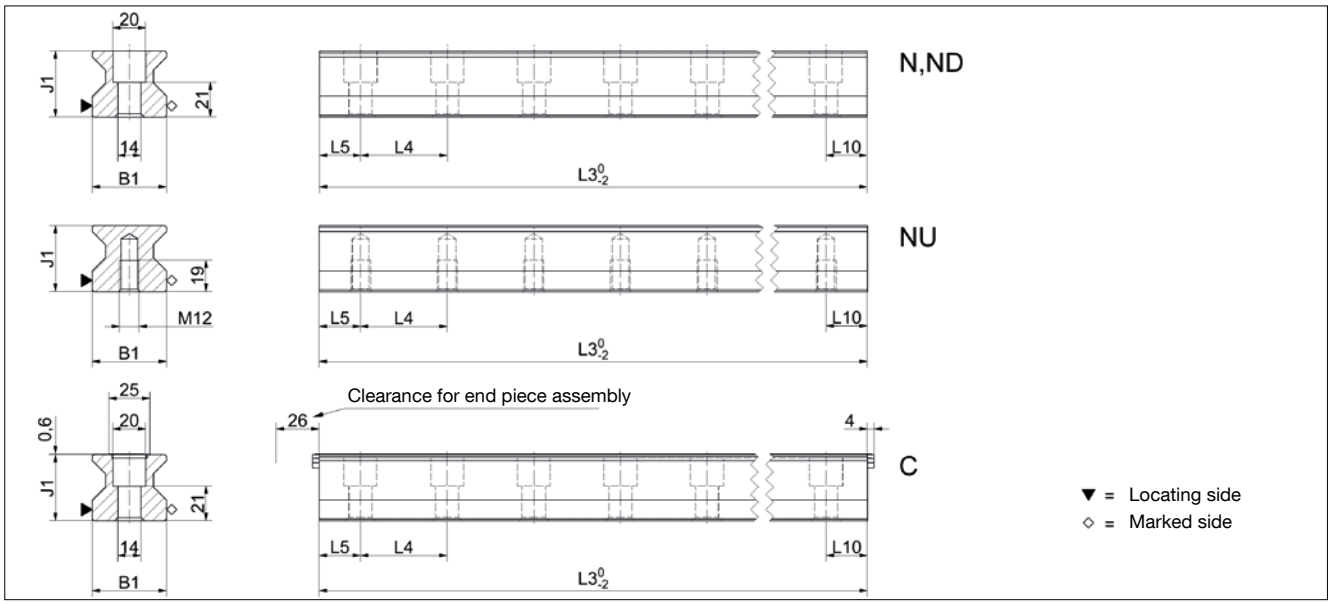

MR W 45 Drawings

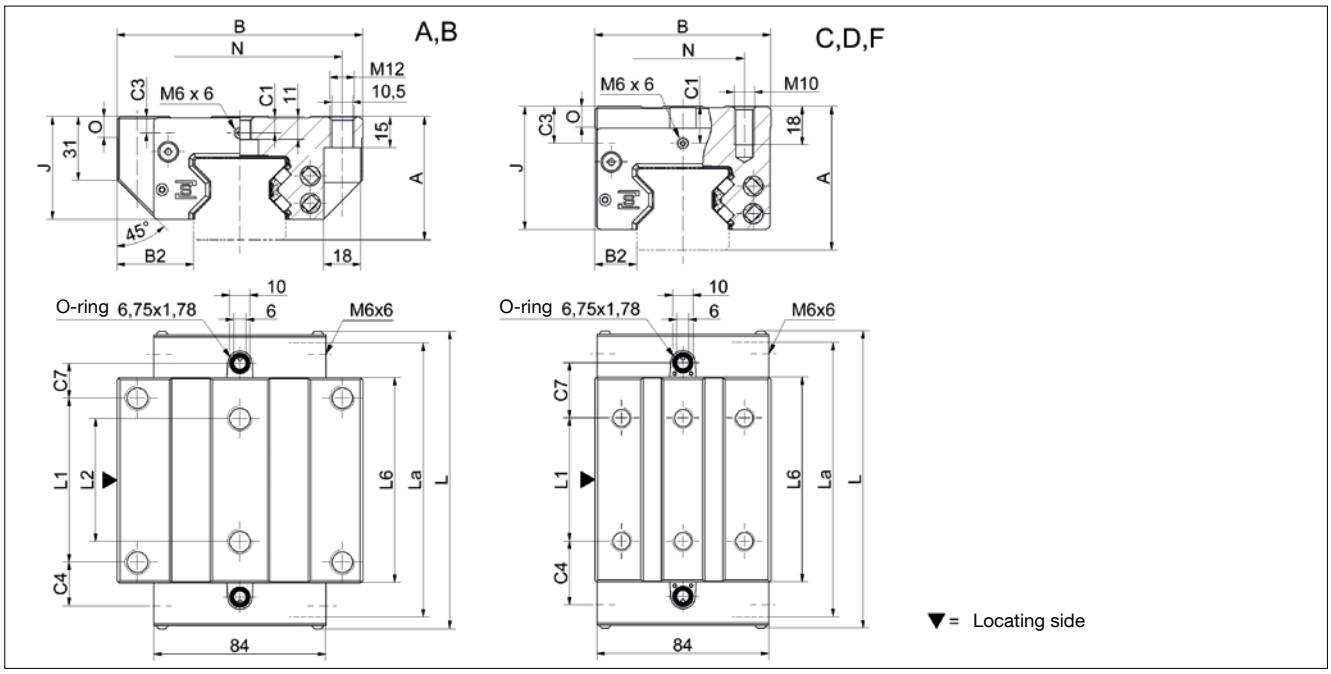

MR W 45 Rigidity diagram

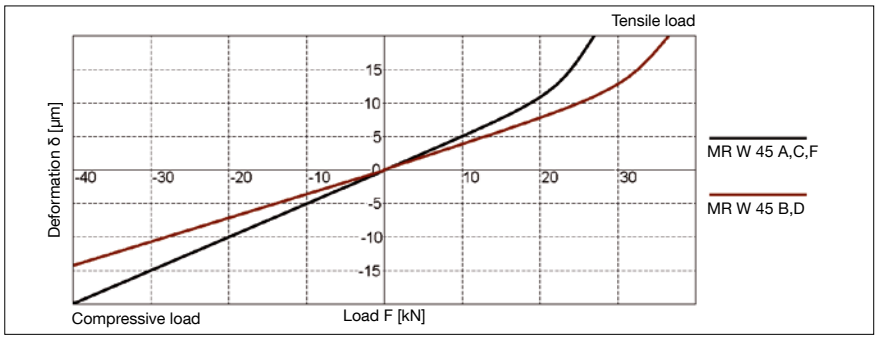

MR W 45 Load rating

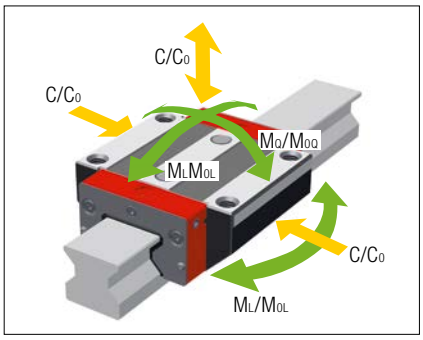

3.2 Technical data and options

MR Size 45

MR S 45 Dimensions

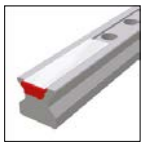

	MR S 45-N	MR S 45-ND	MR S 45-NU	MR S 45-C			
B1: Rail width	45	45	45	45			
J1: Rail height	40	40	40	40			
L3: Rail length max.	6000	1500	6000	6000			
L4: Spacing of fixing holes	52.5	52.5	52.5	52.5			
L5/L10:Position of first/last fixing hole	25	25	25	25			
Gew.: Rail weight, specific (kg/m)	10.8	10.8	11.8	10.6			

Available options for MR S 45

MR W 45 Dimensions and capacities

	MR W 45-A	MR W 45-B	MR W 45-C	MR W 45-D	MR W 45-F		
A: System height	60	60	70	70	60		
B: Carriage width	120	120	86	86	86		
B2: Distance between locating faces	37.5	37.5	20.5	20.5	20.5		
C1: Position of center front lube hole	8	8	18	18	8		
C3: Position of lateral lube hole	8	8	18	18	8		
C4: Position of lateral lube hole	21.25	38.75	31.25	38.75	31.25		
C7: Position of top lube hole	17	34.5	27	34.5	27		
J: Carriage height	50	50	60	60	50		
L: Carriage length	145	180	145	180	145		
La: Cross wiper spacing*	140	175	140	175	140		
L1: Exterior fixing hole spacing	80	80	60	80	60		
L2: Interior fixing hole spacing	60	60	-	-	-		
L6: Steel body length	100	135	100	135	100		
N: Lateral fixing hole spacing	100	100	60	60	60		
O: Reference face height	10	10	10	10	10		
Capacities and weights							
C0: Static load capacitiy (N)	167500	229500	167500	229500	167500		
C100: Dynamic load capacity (N)	93400	127800	93400	127800	93400		
M0Q: Static cross moment capacity (Nm)	4621	6333	4621	6333	4621		
M0L: Static longitud. moment capacity (Nm)	2790	5161	2790	5161	2790		
MQ: Dyn. cross moment capacity (Nm)	2577	3527	2577	3527	2577		
ML: Dyn. longitud. moment capacity (Nm)	1556	2874	1556	2874	1556		
Gew.: Carriage weight (kg)	3.2	4.3	3.0	4.0	2.3		

Note: *Required to determine the rail length from the projected travel distance

Available options for MR W 45

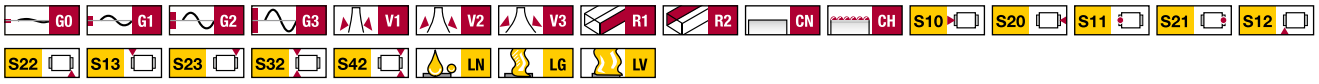

MR S 55 Drawings

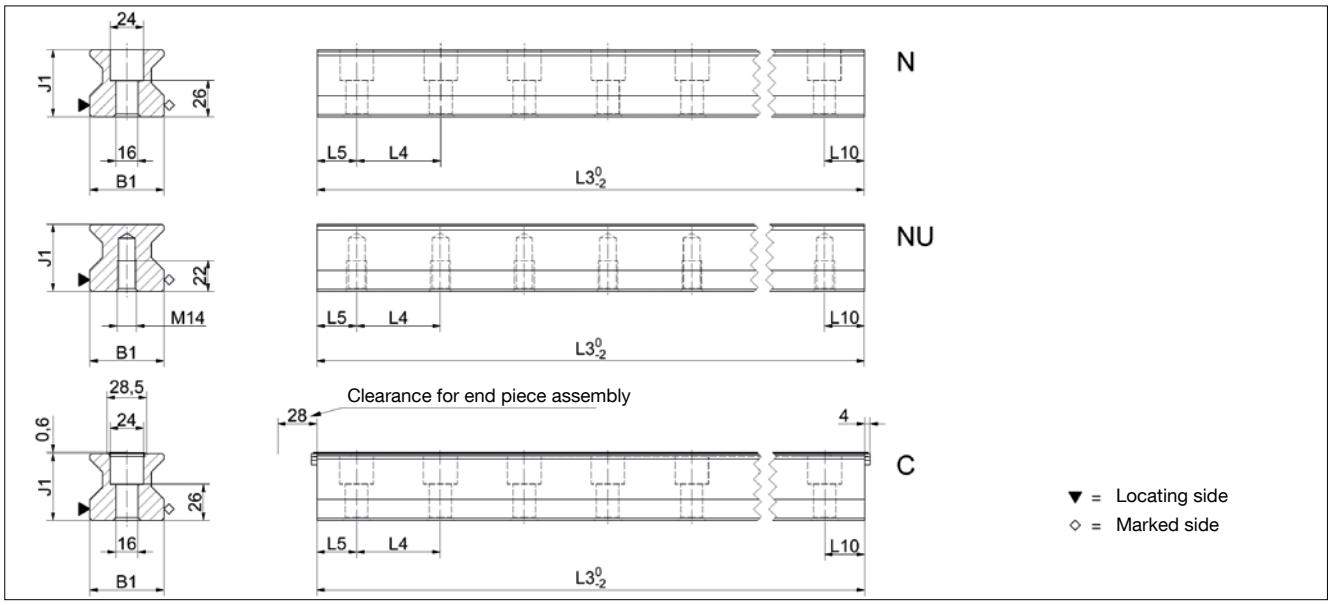

MR W 55 Drawings

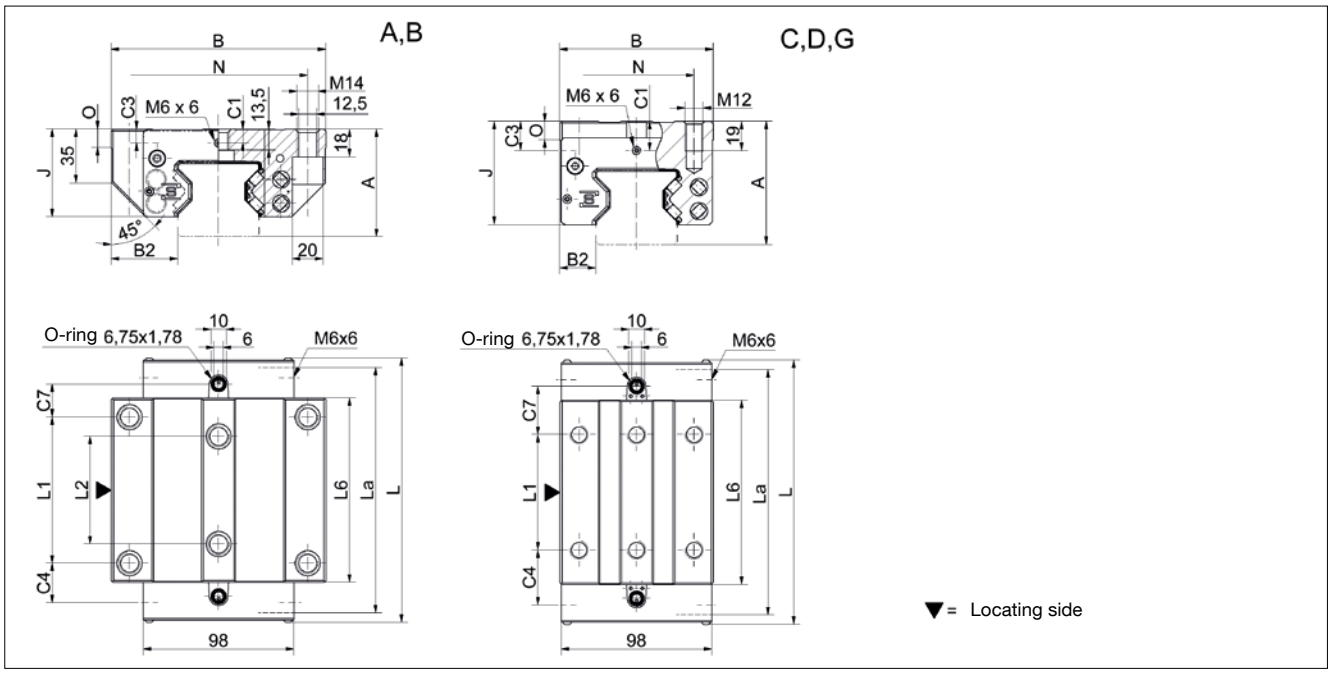

MR W 55 Rigidity diagram

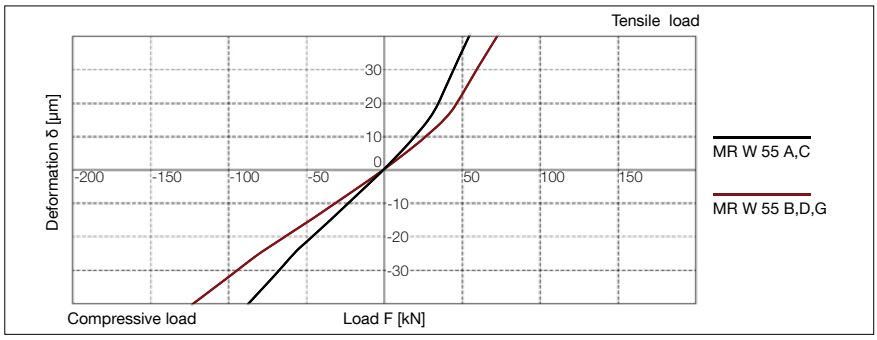

MR W 55 Load rating

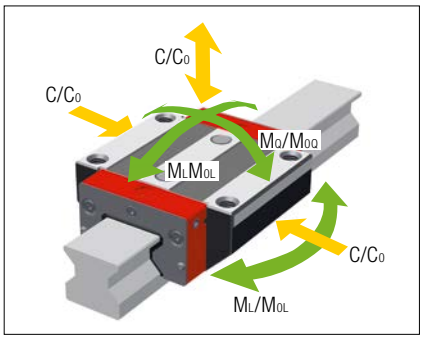

MR S 55 Dimensions

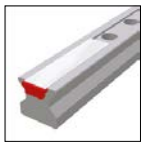

	MR S 55-N	MR S 55-NU	MR S 55-C				
B1: Rail width	53	53	53				
J1: Rail height	48	48	48				
L3: Rail length max.	6000	6000	6000				
L4: Spacing of fixing holes	60	60	60				
L5/L10:Position of first/last fixing hole	28.5	28.5	28.5				
Gew.: Rail weight, specific (kg/m)	15.2	16.6	14.9				

Available options for MR S 55

MR W 55 Dimensions and capacities

	MR W 55-A	MR W 55-B	MR W 55-C	MR W 55-D	MR W 55-G		
A: System height	70	70	80	80	70		
B: Carriage width	140	140	100	100	100		
B2: Distance between locating faces	43.5	43.5	23.5	23.5	23.5		
C1: Position of center front lube hole	9	9	19	19	9		
C3: Position of lateral lube hole	9	9	19	19	9		
C4: Position of lateral lube hole	25.75	46.75	35.75	46.75	46.75		
C7: Position of top lube hole	21.5	42.5	31.5	42.5	42.5		
J: Carriage height	57	57	67	67	57		
L: Carriage length	172	214	172	214	214		
La: Cross wiper spacing*	167	208	167	208	208		
L1: Exterior fixing hole spacing	95	95	75	95	95		
L2: Interior fixing hole spacing	70	70	-	-	-		
L6: Steel body length	120	162	120	162	162		
N: Lateral fixing hole spacing	116	116	75	75	75		
O: Reference face height	12	12	12	12	12		
Capacities and weights							
C0: Static load capacitiy (N)	237000	324000	237000	324000	324000		
C100: Dynamic load capacity (N)	131900	180500	131900	180500	180500		
M0Q: Static cross moment capacity (Nm)	7771	10624	7771	10624	10624		
M0L: Static longitud. moment capacity (Nm)	4738	8745	4738	8745	8745		
MQ: Dyn. cross moment capacity (Nm)	4325	5919	4325	5919	5919		
ML: Dyn. longitud. moment capacity (Nm)	2637	4872	2637	4872	4872		
Gew: Carriage weight (kg)	5.0	6.8	4.5	6.1	4.8		

Note: *Required to determine the rail length from the projected travel distance

Available options for MR W 55

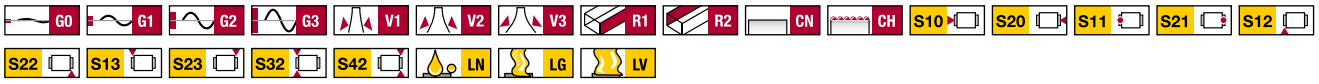

MR S 65 Drawings

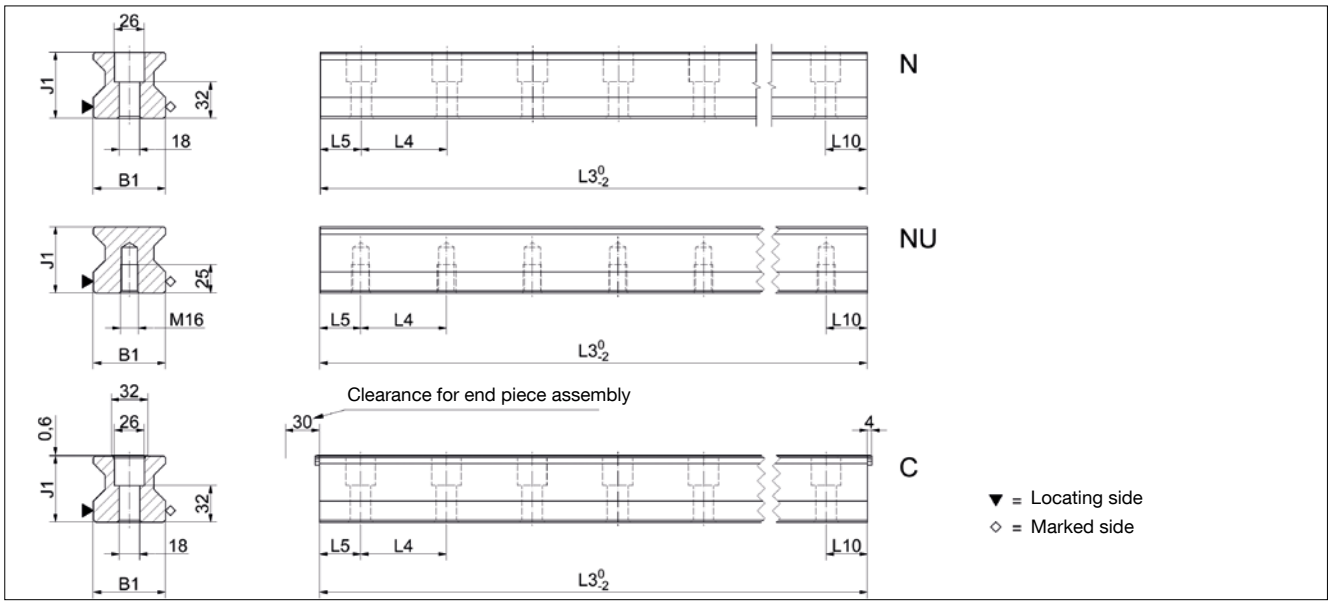

MR W 65 Drawings

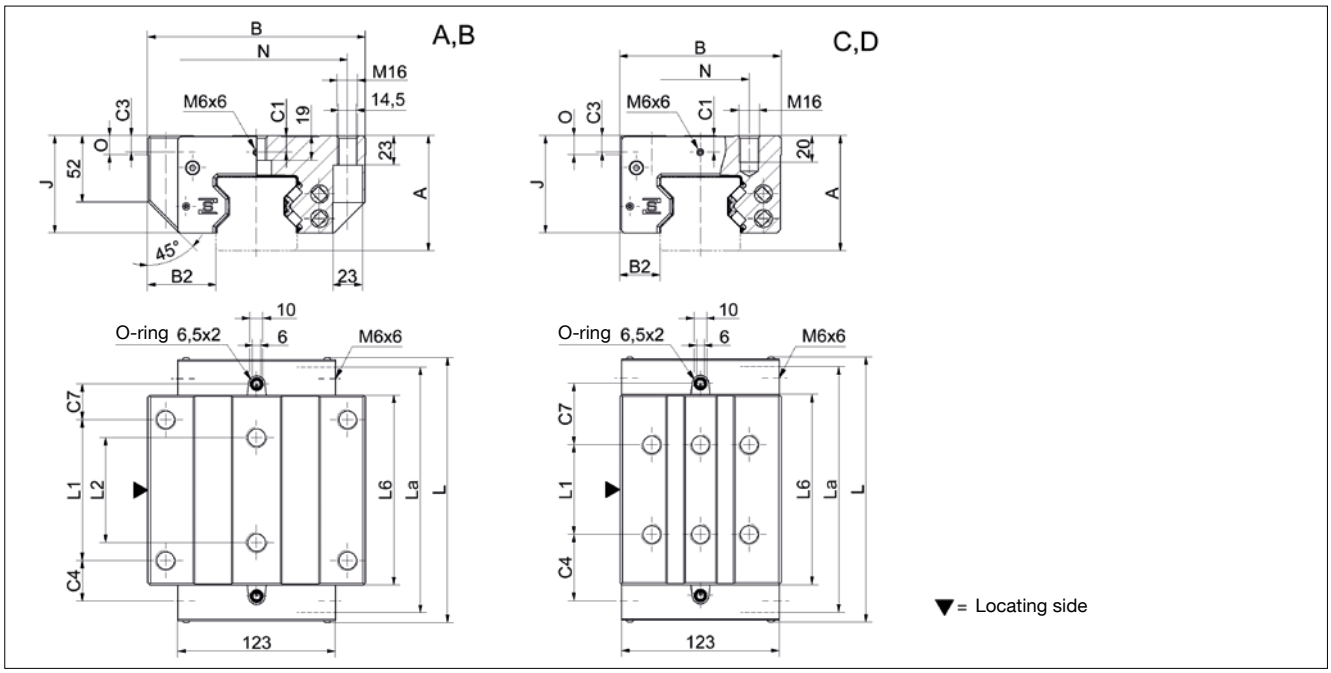

MR W 65 Rigidity diagram

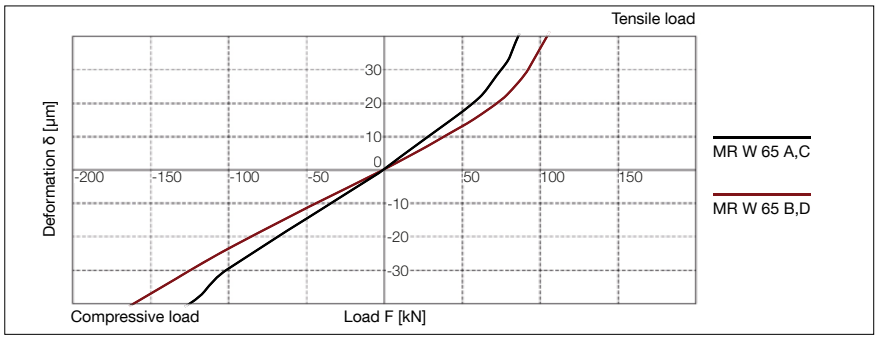

MR W 65 Load rating

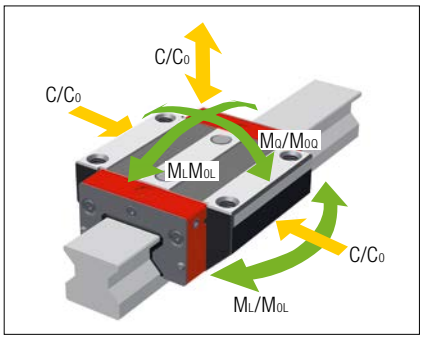

MR S 65 Dimensions

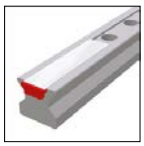

	MR S 65-N	MR S 65-NU	MR S 65-C
B1: Rail width	63	63	63
J1: Rail height	58	58	58
L3: Rail length max.	6000	6000	6000
L4: Spacing of fixing holes	75	75	75
L5/L10:Position of first/last fixing hole	36	36	36
Gew.: Rail weight, specific (kg/m)	22.8	24.5	22.5

Available options for MR S 65

MR W 65 Dimensions and capacities

	MR W 65-A	MR W 65-B	MR W 65-C	MR W 65-D
A: System height	90	90	90	90
B: Carriage width	170	170	126	126
B2: Distance between locating faces	53.5	53.5	31.5	31.5
C1: Position of center front lube hole	13	13	13	13
C3: Position of lateral lube hole	13	13	13	13
C4: Position of lateral lube hole	31.75	58	51.75	53
C7: Position of top lube hole	27.75	54	47.75	49
J: Carriage height	76	76	76	76
L: Carriage length	207	260	207	260
La: Cross wiper spacing*	201.5	254	201.5	254
L1: Exterior fixing hole spacing	110	110	70	120
L2: Interior fixing hole spacing	82	82	-	-
L6: Steel body length	148.5	201	148.5	201
N: Lateral fixing hole spacing	142	142	76	76
O: Reference face height	15	15	15	15
Capacities and weights				
C0: Static load capacitiy (N)	419000	530000	419000	530000
C100: Dynamic load capacity (N)	232000	295000	232000	295000
M0Q: Static cross moment capacity (Nm)	16446	20912	16446	20912
M0L: Static longitud. moment capacity (Nm)	10754	17930	10754	17930
MQ: Dyn. cross moment capacity (Nm)	9154	11640	9154	11640
ML: Dyn. longitud. moment capacity (Nm)	5954	9980	5954	9980
Gew: Carriage weight (kg)	10.2	13.5	8.0	10.4

Note: *Required to determine the rail length from the projected travel distance

Available options for MR W 65

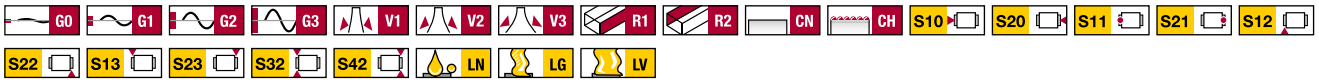

MR S 100 Drawings

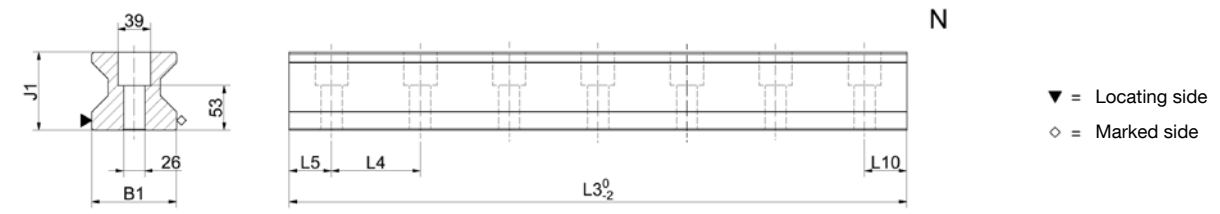

MR W 100 Drawings

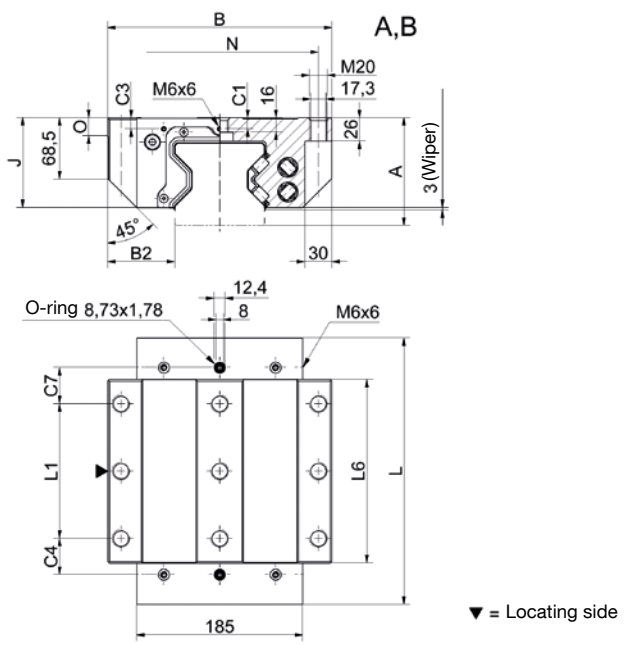

MR W 100 Rigidity diagram

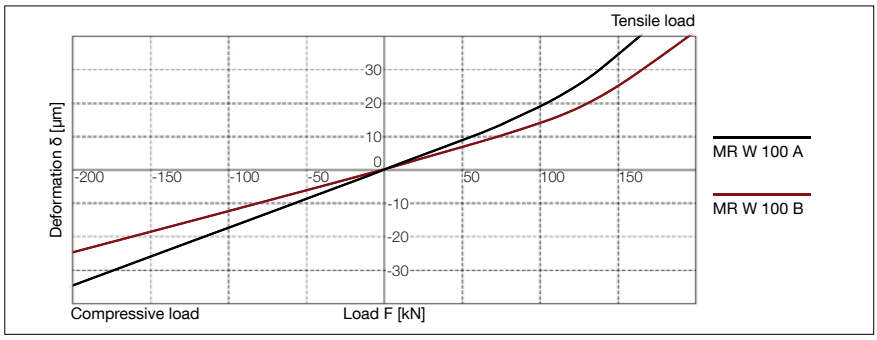

MR W 100 Load rating

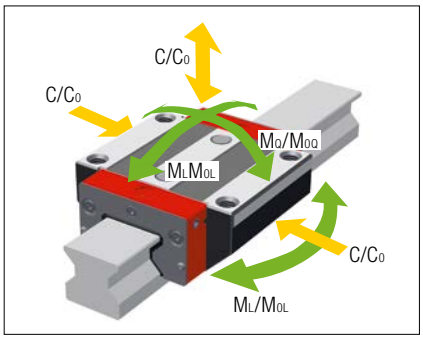

MR S 100 Dimensions

	MR S 100-N
B1: Rail width	100
J1: Rail height	92
L3: Rail length max.	3000
L4: Spacing of fixing holes	105
L5/L10: Position of first/last fixing hole	51
Gew.: Rail weight, specific (kg/m)	55.3

Available options for MR S 100

MR W 100 Dimensions and capacities

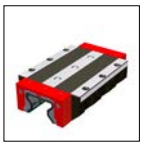

	MR W 100-A	MR W 100-B
A: System height	120	120
B: Carriage width	250	250
B2: Distance between locating faces	75	75
C1: Position of center front lube hole	12.5	12.5
C3: Position of lateral lube hole	12.5	12.5
C4: Position of lateral lube hole	40.3	67
C7: Position of top lube hole	40.3	67
J: Carriage height	100	100
L: Carriage length	296.5	400
L1: Exterior fixing hole spacing	150	200
L2: Interior fixing hole spacing	-	-
L6: Steel body length	204.5	308
N: Lateral fixing hole spacing	220	220
O: Reference face height	20	20
Capacities and weights		
C0: Static load capacitiy (N)	976610	1470000
C100: Dynamic load capacity (N)	401115	605000
M0Q: Static cross moment capacity (Nm)	60645	91471
M0L: Static longitud. moment capacity (Nm)	26143	39432
MQ: Dyn. cross moment capacity (Nm)	24959	37646
ML: Dyn. longitud. moment capacity (Nm)	10759	16229
Gew: Carriage weight (kg)	27.0	40.0

Available options for MR W 100

MR Rails accessories overview

Accessories	MR S 25	MR S 30	MR S 35	MR S 45	MR S 55	MR S 65	MR S 100
Plugs:							
Plastic plugs	MRK 25	MRK 30	MRK 35	MRK 45	MRK 55	MRK 65	MRK 100
Brass plugs	MRS 25	MRS 30	MRS 35	MRS 45	MRS 55	MRS 65	MRS 100
Steel plugs	MRZ 25	MRZ 30	MRZ 35	MRZ 45	MRZ 55	MRZ 65	MRZ 100
Cover strips:							
Cover strip (spare part)	MAC 25	-	MAC 35	MAC 45	MAC 55	MAC 65	-
Securing band for cover strip (spare part)	BSC 25-MAC	-	BSC 35-MAC	BSC 45-MAC	BSC 55-MAC	BSC 65-MAC	-
End piece for cover strip (spare part)	EST 25-MAC	-	EST 35-MAC	EST 45-MAC	EST 55-MAC	EST 65-MAC	-
Assembly tools:							
Installation tool for steel plugs	MWH 25	MWH 30	MWH 35	MWH 45	MWH 55	MWH 65	MWH 100
Hydraulic cylinder for MWH	MZH	MZH	MZH	MZH	MZH	MZH	MZH
Installation tool for cover strip	MWC 25	-	MWC 35	MWC 45	MWC 55	MWC 65	-

MR Carriages accessories overview

Accessories	MR W 25	MR W 30	MR W 35	MR W 45	MR W 55	MR W 65	MR W 100
Additional wipers:							
Additional wipers Viton	ZCV 25	ZCV 30	ZCV 35	ZCV 45	ZCV 55	ZCV 65	ZCV 100
Metal wiper	ASM 25	ASM 30	ASM 35	ASM 45	ASM 55	ASM 65	ASM 100
Bellows:							
Bellows	FBM 25	-	FBM 35	FBM 45	FBM 55	FBM 65	-
Adapter plate for bellows (spare part)	ZPL 25	-	ZPL 35	ZPL 45	ZPL 55	ZPL 65	-
End plate for bellows (spare part)	EPL 25	-	EPL 35	EPL 45	EPL 55	EPL 65	-
Assembly rails:							
Assembly rail	MRM 25	MRM 30	MRM 35	MRM 45	MRM 55	MRM 65	MRM 100
Lubrication plates:							
Lubrication plate	SPL 25-MR	-	SPL 35-MR	SPL 45-MR	SPL 55-MR	SPL 65-MR	-
Front plates:							
Cross wiper (spare part)	QAS 25-STR	QAS 30-STR	QAS 35-STR	QAS 45-STR	QAS 55-STR	QAS 65-STR	STP 100-STR
Lube nippels:							
Hydraulic-type grease nipple straight	SN 6	SN 6	SN 6	SN 6	SN 6	SN 6	SN 6
Hydraulic-type grease nipple 45°	SN 6-45	SN 6-45	SN 6-45	SN 6-45	SN 6-45	SN 6-45	SN 6-45
Hydraulic-type grease nipple 90°	SN 6-90	SN 6-90	SN 6-90	SN 6-90	SN 6-90	SN 6-90	SN 6-90
Flush type grease nipple M3	SN 3-T	-	-	-	-	-	-
Flush type grease nipple M6	SN 6-T	SN 6-T	SN 6-T	SN 6-T	SN 6-T	SN 6-T	SN 6-T
Grease gun for SN 3-T und SN 6-T	SFP-T3	SFP-T3	SFP-T3	SFP-T3	SFP-T3	SFP-T3	SFP-T3
Lube adapters:							
Lubrication adapter M8 round-head	SA 6-RD-M8	SA 6-RD-M8	SA 6-RD-M8	SA 6-RD-M8	SA 6-RD-M8	SA 6-RD-M8	SA 6-RD-M8
Lubrication adapter M8 hexagon head	-	-	SA 6-6KT-M8	SA 6-6KT-M8	SA 6-6KT-M8	SA 6-6KT-M8	SA 6-6KT-M8
Lubrication adapter G1/8 hexagon head	-	-	SA 6-6KT-G1/8	SA 6-6KT-G1/8	SA 6-6KT-G1/8	SA 6-6KT-G1/8	SA 6-6KT-G1/8
Swivel screw connection for pipe d=3 mm	SV 3-D3	-	-	-	-	-	-
Swivel screw connection for pipe d=4 mm	SV 6-D4	SV 6-D4	SV 6-D4	SV 6-D4	SV 6-D4	SV 6-D4	SV 6-D4
Swivel screw connection M6	SV 6-M6	SV 6-M6	SV 6-M6	SV 6-M6	SV 6-M6	SV 6-M6	SV 6-M6
Swivel screw connection M6 long	SV 6-M6-L	SV 6-M6-L	SV 6-M6-L	SV 6-M6-L	SV 6-M6-L	SV 6-M6-L	SV 6-M6-L
Swivel screw connection M8	SV 6-M8	SV 6-M8	SV 6-M8	SV 6-M8	SV 6-M8	SV 6-M8	SV 6-M8
Swivel screw connection M8 long	SV 6-M8-L	SV 6-M8-L	SV 6-M8-L	SV 6-M8-L	SV 6-M8-L	SV 6-M8-L	SV 6-M8-L

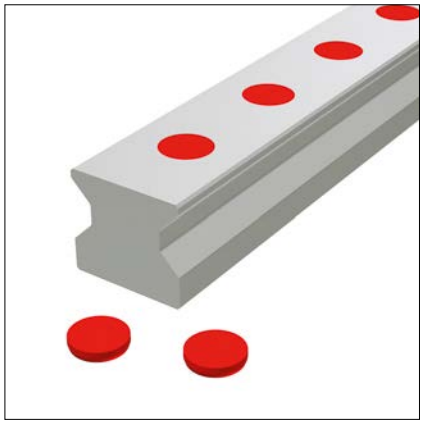

Plastic plugs
MRK plastic plugs are used as a low-cost method of closing off the rail attachment holes. They can be fitted manually with fairly simple tools. Plastic plugs are recommended for use with protected axes or in environments with low levels of contamination, e.g. handling.

Quantity supplied: Pack of 25 pcs.

Order code: **MRK xx**
xx = Size, sample order: 6 x MRK 65

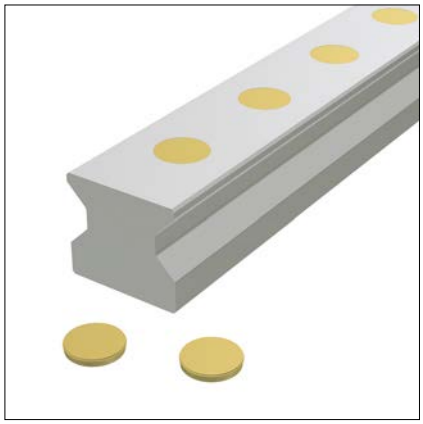

Brass plugs
Brass plugs are used in applications with increased contamination or external temperature influences, e.g., in the case of chip impact or whenever a smooth and gap-free rail surface is required.
A hydraulic MWH fitting tool is recommended for correct installation.

Order code: **MRS xx**
xx = Size, sample order: 48 x MRS 65

Steel plugs
Made of stainless steel, the two-part steel plugs are suitable for applications with greater demands on the mechanical stability of rail surfaces, e.g. when mechanical loads are higher or in open chip spaces. They combine the advantages of simple and very precise installation and a high degree of mechanical stability.

Function:
The clamping ring lies loosely on the screw head in the hole in the rail. When the slightly conical plug is pressed in, the ring is expanded to establish a positive frictional connection between the plug and the hole in the rail.
When fitted, the plug is flush with the rail surface where it ensures that the wipers operate to the optimum degree and have an optimum service life.
A hydraulic MWH fitting tool is necessary for correct installation.

Order code: **MRZ xx**
xx = Size, sample order: 48 x MRZ 65

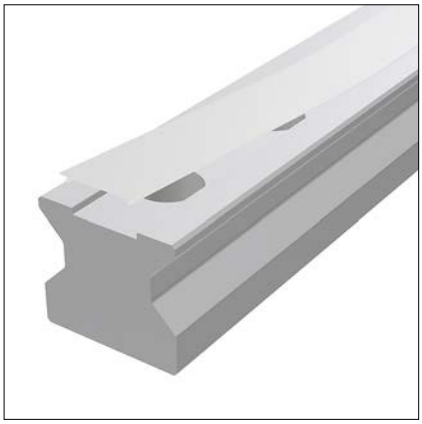

Cover strip (spare part)
A SCHNEEBERGER MAC cover strip combines technical functionality with simple handling and neat appearance. Made of stainless spring steel, the strip is suitable for demading applications with increased contamination or external temperature influences.

It provides the following advantages:
- Reliable fixing along the length as it is clipped into a special groove
- Additional fixing of the ends of the strips using locking parts (EST xx-MAC)
- Very robust thanks to the substantial thickness of the material
- The strip free top surface of the rail can be used to support covers
- Can be fitted and removed several times
- Protection of the wipers during installation as the rail holes are recessed in the groove
- Available in any length up to 30m

When ordering guide rails with cover strips, they are included in the scope of supply.

Order code: **MAC xx-yy**
xx = Size, yy = Rail length in mm, sample order: 1 x MAC 65-4320

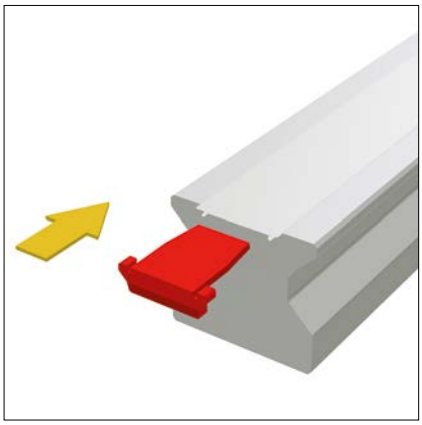

End piece for cover strip (spare part)
EST end pieces are used to close the ends of MAC cover strips. To do this, these plastic parts are inserted on both ends of the rail into the gap under the cover strip. Their special design prevents the ends of the cover strip from lifting and reduces the danger of injury on the sharp edges of the cover strip.

Order code: **EST xx-MAC**
xx = Size, sample order: 2 x EST 65-MAC

Securing band for cover strip (spare part)
The BSC securing band for cover strips is used to secure the ends when mechanical loads are high. To do this, the protruding band ends are cut off at right angles and burr-free, and a fastening thread is fitted to the front face of the rail.
Securing bands are used in applications with high vibration levels, with rails in open chip spaces, with rail lengths of less than 600 mm or for vertical fitting and the subsequent risk that EST endpieces could fall out.
The securing band also covers the ends of the cover strips and reduces the risk of injury on the sharp corners of the ends.

Order code: **BSC xx-MAC**
xx = Size, order example: 2 x BSC 65-MAC

Installation tool for cover strip
A MWC fitting tool is used to simplify the fitting of an MAC cover strip. At the same time, it ensures that the cover strip sits securely in the rail groove without any gaps.

Order code: **MWC xx**
xx = Size, sample order: 1 x MWC 35

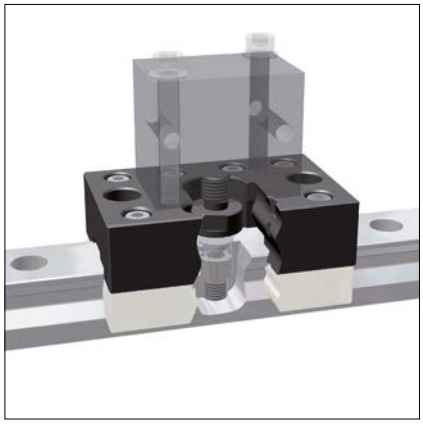

Installation tool for steel plugs
An MWH hydraulic cylinder is a single-action block cylinder used to create the required insertion force. A standard hydraulic unit that provides the pressure required for the insertion process is connected to the 1/4“ threaded connection. The hydraulic cylinder fits all sizes of MWH fitting tool and must be ordered separately.

Order code: **MWH**
Sample order: 1 x MWH

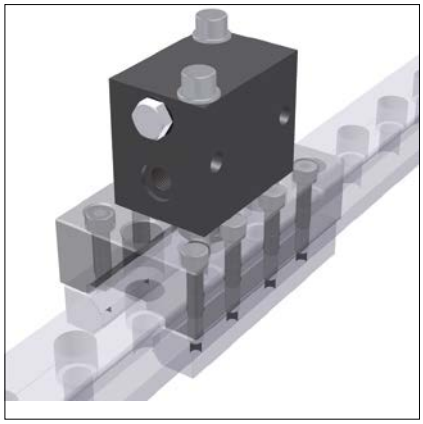

Hydraulic cylinder for MWH
An MZH hydraulic cylinder is a single-action block cylinder used to create the required insertion force. A standard hydraulic unit that provides the pressure required for the insertion process is connected to the 1/4“ threaded connection. The hydraulic cylinder fits all sizes of MWH fitting tool and must be ordered separately.

Order code: **MZH**
Sample order: 1 x MZH

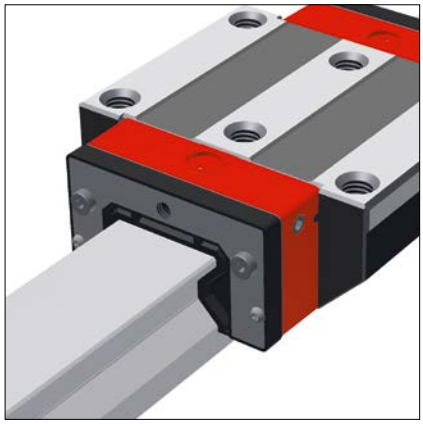

Additional wiper Viton
ZCV additional wipers provide extra protection of the carriages in heavily contaminated environments. Made of Viton® (fluoroelastomer), they are suitable for use with aggressive coolants.
As their flexibility allows them to be pushed over the rail cross section, retrofitting is possible without the need to remove the carriage from the rail. ZCV wipers can also be used in combination with ASM metal wipers.

Order code: **ZCV xx**
xx = Size, sample order: 2 x ZCV 65

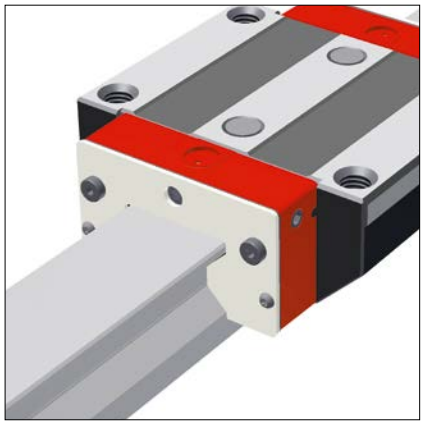

Metal wiper
The ASM metal wipers made of stainless steel are used when large, loose particles of dirt on the guideway need to be removed. The radial gap between the wiper and guideway is narrower than in the MR-4S front panel and is therefore designed in such a way that the particles cannot get stuck.
The metal wipers are particularly effective when combined with additional ZCV wipers.

Order code: **ASM xx**
xx= Size, sample order: 1 x ASM 65

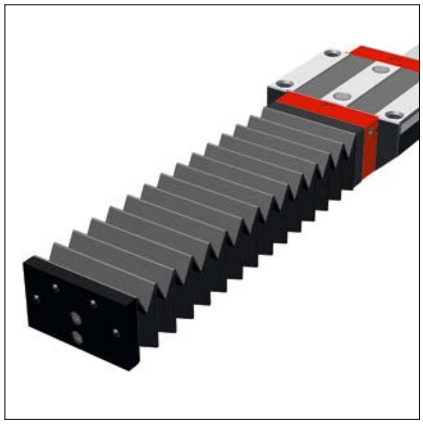

Bellows
Standard bellows are available for MONORAIL sizes MR 25 – MR 65, the purpose of which is to provide additional protection against dust and water splashes. The bellows are made of synthetic fabric coated on both sides with plastic. The bellows cover the entire length of the rail and their cross section matches the faceplate of the carriage. The external dimensions of the carriage are thus not exceeded by the bellows.
Installation is simple and takes little time. A ZPL adapter plate is required to attach the bellows to the carriage. The adapter plate is screwed to the front plate of the carriage using a central screw. An EPL end plate is screwed to the end face of the rail. The bellows are fastened by two rivets to both the adapter plate and the front plate.
Retrofitting can only be realised with induction hardened rails as the rail ends have to be drilled for the attachment of the EPL end plates.
When ordering a guideway with bellows, the fixing holes for the end plates are arranged in the rails.

Order code: **FBM xx-yy**
xx = Size, yy = Number of folds, sample order: 1 x FBM 65-137

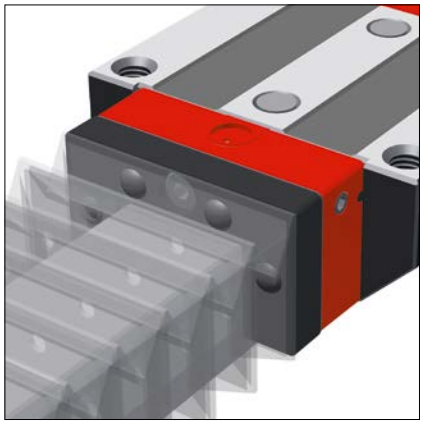

Adapter plate for bellows (spare part)
The adapter plate is used to attach the bellows to the carriage and is included with every order for bellows. It is made of black anodized aluminium. On an MR 25 size, the adapter plate is also used for a lateral lubrication connection.
The outer contour of the adapter plate corresponds to that of the carriage front plate, the bellows and the end plate. The central fastening screw is included in the scope of supply.

Order code: **ZPL xx**
XX = Size, sample order: 2 x ZPL 65

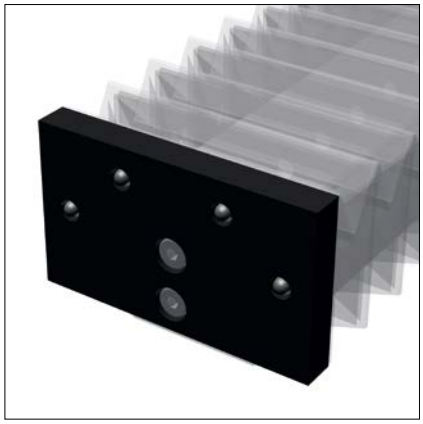

End plate for bellows (spare part)
Made of black anodized aluminium, the end plate is used to attach the bellows to the end of the rail. It is included with every order for a set of bellows.
The attaching holes must be drilled in the rail if the bellows are to be retrofitted. For this reason, we recommend the use of induction-hardened rails for retrofits.
The external dimensions of the end plate correspond to that of the carriage front plate, the bellows and the adapter plate. Both fastening screws are supplied with the end plate.

Order code: **EPL xx**
xx = Size, sample order: 2 x EPL 65

Assembly rail
The assembly rail is required when a carriage has to be removed from the rail and then reinstalled during the installation of the MONORAIL.
It is advisable to leave the assembly rail in the carriage to protect the rollers against contamination.
If necessary, the two internal carriage attaching screws can be fitted and tightened through the two holes in the assembly rail.

Order code: **MRM xx**
xx = Size, sample order: 1 x MRM 65

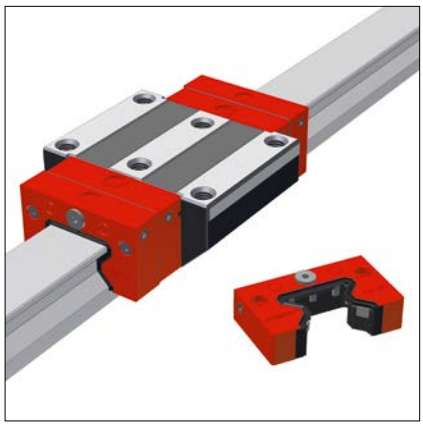

Lubrication plate
An SPL lubrication plate is used wherever long lubrication intervals are required. Thanks to its integral oil reservoir, the rolling elements are supplied with an automatic and uniform supply of lubrication over an extended period.
It is ideally used in dry and clean environments as in handling technology or on the ancillary axes of machine tools.

The advantages are:
- Assured supply of lubrication in any installation position
- Long lubrication intervals of up to 5,000 km or 12 months according to use
- Refill apertures closed with screws
- Reduced outlay on lubrication and accessories
- Low environmental impact thanks to minimum consumption of lubricant
- Wipers have a long service life as oil is also supplied to the top surface of the rail

For maximum travel distances without re-lubrication, the lubrication plates are always used in pairs and the carriages are given an additional filling of grease.
The lubrication plates have the same dimensions as the carriage front plates and are installed in front of these. Retrofitting is possible.
Additional ZCV wipers must be provided in applications in which particles of dirt can come into contact with the guideways.

Order code: **SPL xx-MR**
xx = Size, sample order: 2 x SPL 65-MR

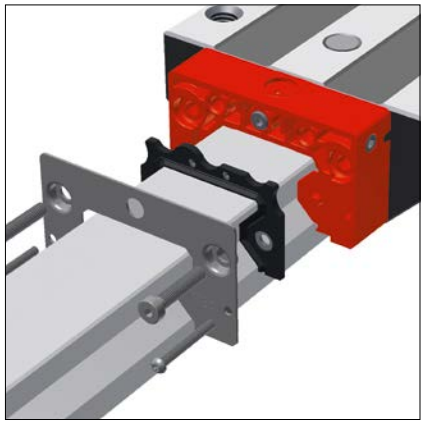

Cross wiper (spare part)
The double-lipped cross wipers are subject to natural abrasive wear and must therefore be checked regularly and replaced if necessary. To do this, the front panel is loosened and removed from the front plate. The wiper can then be removed and replaced.

Order code: **QAS xx-STR**
xx = Size, sample order: 1 x QAS 65-STR

3.4 Order key

Individual guide rails and carriages are ordered in accordance with the order codes described below.
Q.v. chapter 2.1 and chapter 3.3 for the order key for accessories.
Separate order codes are used in each case for rails, carriages and accessories. This also applies to different versions of rails and carriages.
All guide components are supplied individually as standard, i.e. unassembled.
If required, SCHNEEBERGER can also supply rails and carriages assembled incl. accessories as complete systems. Please note the ordering instructions in chapter 2.4 if this applies.

Order code for MR Rails

	2x	MR S	35	-N	-G1	-KC	-R1	-918	-19	-19	-CN
Quantity											
Rail											
Size											
Type											
Accuracy											
Straightness											
Reference side											
Rail length L3											
Position of first fixing hole L5											
Position of last fixing hole L10											
Coating											

NB
Q.v. chapter 3.1 to 3.3 for an overview of types, details of shapes, available options and accessories.
Q.v. chapter 2 for a description of the options.
If possible, standard lengths are preferred for L3 rail length.
These are calculated with the table values in chapter 3.2 using the following formula: $L3 = n \times L4 + L5 + L10 \leqslant L3max$.
Standard $L5 / L10 = (L4 / 2) - 1{,}5$

Order code for MR Carriages

	4x	MR W	35	-A	-G1	-V3	-R1	-CN	-S10	-LN
Quantity										
Carriage										
Size										
Type										
Accuracy										
Preload										
Reference side										
Coating										
Lube connection										
Lubrication as delivered condition										

NB
Q.v. chapter 3.1 to 3.3 for an overview of types, details of shapes, available options and accessories.
Q.v. chapter 2 for a description of the options.
When ordering version 4S MR carriages, „(4S)“ is added to the end of the order code.