HIWIN®

Linear Guideway

Technical Information

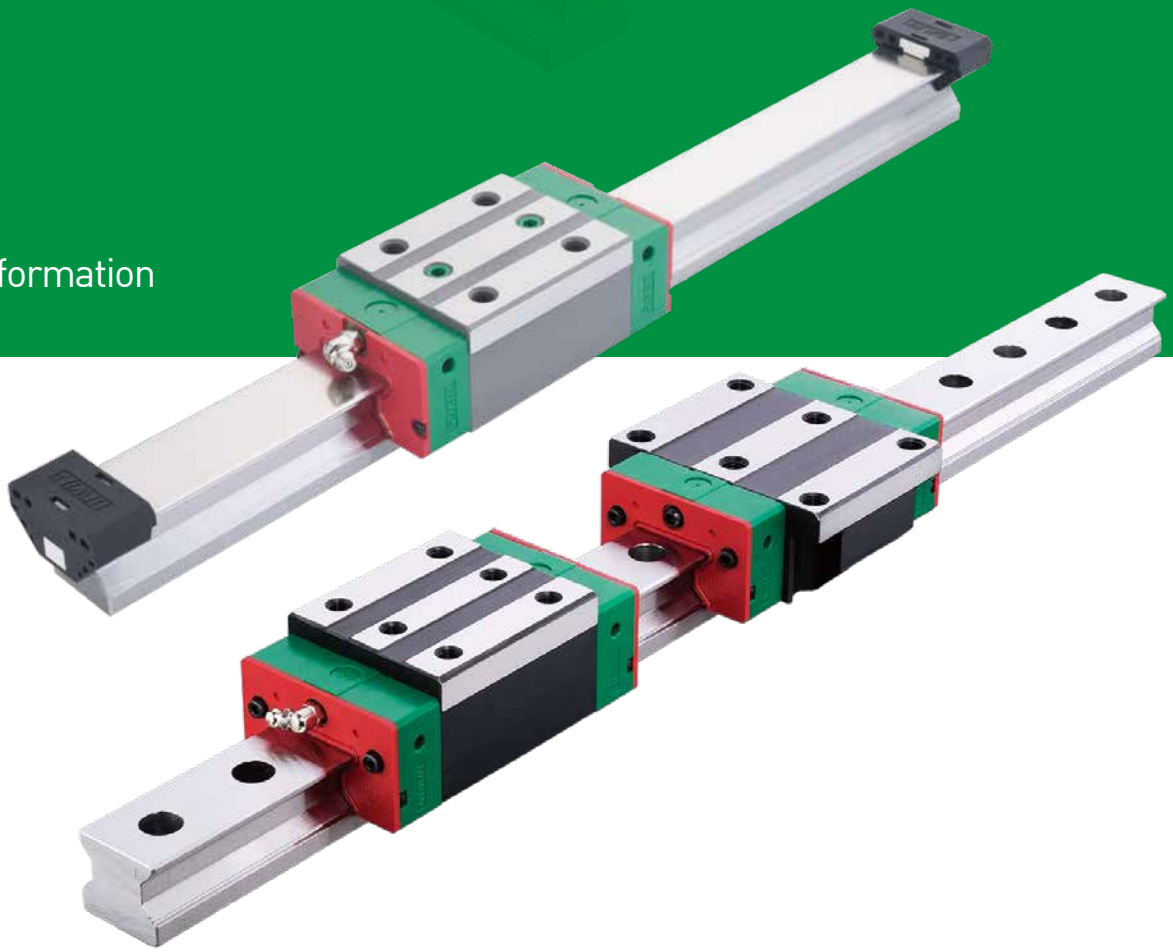

HIWIN Support

About HIWIN

HIWIN® INDUSTRIE 4.0 Best Partner

Semiconductor Subsystem

Semiconductor/LED/Panel
- EFEM (Equipment Front End Module)
- Wafer Robot
- Loadport
- Wafer Aligner

Multi-Axis Robot

Pick-and-Place / Assembly / Array and Packaging / Semiconductor / Electro-Optical Industry / Automotive Industry / Food Industry
- Articulated Robot
- SCARA Robot
- Electric Gripper
- Integrated Electric Gripper

Single-Axis Robot

Precision / Semiconductor / Medical / FPD
- KK, SK
- KS, KA
- KU, KE, KC

Torque Motor Rotary Table

Medical / Automotive Industry / Machine Tools / Machinery Industry
- RAB Series
- RAS Series
- RCV Series
- RCH Series

Ballscrew

Precision Ground / Rolled
- Super S Series
- Super T Series
- Mini Roller
- Ecological & Economical Lubrication Module E2
- Rotating Nut (R1)
- Energy-Saving & Thermal-Controlling (Cool Type)
- Heavy Load Series (RD)
- Ball Spline

Linear Guideway

Automation / Semiconductor / Medical
- Ball Type--HG, EG, WE, MG, CG
- Quiet Type--QH, QE, QW, QR
- Other--RG, E2, PG, SE, RC

Bearing

Machine Tools / Robot
- Crossed Roller Bearing
- Ballscrew Bearing
- Support Unit

DATORKER® Strain Wave Gear

Robot / Automation Equipment / Semiconductor Equipment / Machine Tools
- DSC Type
- DSH Type

AC Servo Motor & Drive

Semiconductor / Packaging Machine / SMT / Food Industry / LCD
- Drives--D1, D2T/D2T-LM, E1
- Motors--FR, E1

Medical Equipment

Hospital / Rehabilitation Centers / Nursing Homes
- Robotic Gait Training System
- Robotic Endoscope Holder

Linear Motor Stage

Automated Transport / AOI Application / Precision / Semiconductor
- Iron-core Linear Motor
- Coreless Linear Motor
- Linear Turbo Motor LMT
- Planar Servo Motor
- Air Bearing Platform
- X-Y Stage • Gantry Systems
- Single-Axis Linear Motor Stage

Torque Motor & Direct Drive Motor

Machine Tools
- Torque Motor-- TM-2/IM-2, TMRW Series

Inspection / Testing Equipment / Robot
- Direct Drive Motor-- DMS, DMY, DMN, DMT Series

HIWIN®

Linear Guideways

Technical Information Index

Preface 1

1. General Information 1
- 1-1 Advantages and Features of Linear Guideways 1
- 1-2 The Principles of Selecting Linear Guideways 2
- 1-3 Basic Load Rating of Linear Guideways 3
- 1-4 The Service Life of Linear Guideways 4
- 1-5 Acting Loads 5
- 1-6 Friction 9
- 1-7 Preload and Stiffness 9
- 1-8 Lubrication 10
- 1-9 The Butt-joint Rail 10
- 1-10 Mounting Configurations 11
- 1-11 Mounting Procedures 12

2. HIWIN Linear Guideway Product Series 19
- 2-1 HG Series – Heavy Load Ball Type Linear Guideway 22
- 2-2 EG Series – Low Profile Ball Type Linear Guideway 44
- 2-3 WE Series – Four-Row Wide Rail Linear Guideway 61
- 2-4 MG Series – Miniature Linear Guideway 76
- 2-5 QH Series – Heavy Load Type Linear Guideway, with SynchMotion® Technology 93
- 2-6 QE Series – Low Profile Linear Guideway, with SynchMotion® Technology 109
- 2-7 QW Series – Wide Rail Linear Guideway, with SynchMotion® Technology 121
- 2-8 CG Series – Superior Rolling Moment with Cover Strip Linear Guideway 132
- 2-9 RG Series – High Rigidity Roller Type Linear Guideway 151
- 2-10 CRG Series - High Rigidity Roller Type Linear Guideway with Cover Strip 173
- 2-11 QR Series – Roller Type Linear Guideway, with SynchMotion® Technology 188
- 2-12 AG Series – Angle Linear Guideway 203
- 2-13 E2 Type – Self Lubrication Kit for Linear Guideway 212
- 2-14 PG Type – Positioning Guideway 217
- 2-15 SE Type – Metal End Cap Linear Guideway 232
- 2-16 Stainless Steel Linear Guideway 233
- 2-17 RC Type – Reinforced Cap 234
- 2-18 Grease 235

3.HIWIN Linear Guideway Inquiry Form 239

(The specifications in this catalogue are subject to change without notification.)

Preface

A linear guideway allows a type of linear motion that utilizes rolling elements such as balls or rollers. By using re-circulating rolling elements between the rail and the block, a linear guideway can achieve high precision linear motion. Compared to a traditional slide, the coefficient of friction for a linear guideway is only 1/50. Because of the restraint effect between the rails and the blocks, linear guideways can take up loads in both the up/down and the left/right directions. With these features, linear guideways can greatly enhance moving accuracy, especially, when accompanied with precise ball screws.

1. General Information

1-1 Advantages and Features of Linear Guideways

(1) High positional accuracy
When a load is driven by a linear motion guideway, the frictional contact between the load and the bed desk is rolling contact. The coefficient of friction is only 1/50 of traditional contact, and the difference between the dynamic and the static coefficient of friction is small. Therefore, there would be no slippage while the load is moving.

(2) Long life with high motion accuracy
With a traditional slide, errors in accuracy are caused by the counter flow of the oil film. Insufficient lubrication causes wear between the contact surfaces, which become increasingly inaccurate. In contrast, rolling contact has little wear; therefore, machines can achieve a long life with highly accurate motion.

(3) High speed motion is possible with a low driving force
Because linear guideways have little friction resistance, only a small driving force is needed to move a load. This results in greater power savings, especially in the moving parts of a system. This is especially true for the reciprocating parts.

(4) Equal loading capacity in all directions
With this special design, these linear guideways can take loads in either the vertical or horizontal directions. Conventional linear slides can only take small loads in the direction parallel to the contact surface. They are also more likely to become inaccurate when they are subjected to these loads.

(5) Easy installation
Installing a linear guideway is fairly easy. Grinding or milling the machine surface, following the recommended installation procedure, and tightening the bolts to their specified torque can achieve highly accurate linear motion.

(6) Easy lubrication
With a traditional sliding system, insufficient lubrication causes wear on the contact surfaces. Also, it can be quite difficult to supply sufficient lubrication to the contact surfaces because finding an appropriate lubrication point is not very easy. With a linear motion guideway, grease can be easily supplied through the grease nipple on the linear guideway block. It is also possible to utilize a centralized oil lubrication system by piping the lubrication oil to the piping joint.

(7) Interchangeability
Compared with traditional boxways or v-groove slides, linear guideways can be easily replaced should any damage occur. For high precision grades consider ordering a matched, non-interchangeable, assembly of a block and rail.

1-2 The Principles of Selecting Linear Guideways

Identify the condition

- Type of equipment
- Space limitations
- Accuracy
- Stiffness
- Travel length
- Magnitude and direction of loads
- Moving speed, acceleration
- Duty cycle
- Service life
- Environment

Selection of series

- HG/CG series - Grinding, milling, and drilling machine, lathe, machine center
- EG series - Automatic equipment, high speed transfer device, semiconductor equipment, wood cutting machine, precision measure equipment
- QE/QH series - precision measure equipment, semiconductor equipment, Automatic equipment, laser marking machine, can be widely applied in high-tech industry required high speed, low noise, low dust generation.
- WE/QW series - Automatic device, transportation device, precision measure equipment, semiconductor equipment, blow moulding machine, single axis robot-robotics.
- MG series - Miniature device, semiconductor equipment, medical equipment
- RG/QR/CRG series - CNC machining centers, heavy duty cutting machines, CNC grinding machines, injection molding machines, electric discharge machines, wire cutting machines, plano millers
- AG Series : Sliding Head Lathe (Swiss lathe), Vibration Test Machine, Automated Robot Dispenser, XY moving platform, Measuring instrument, Vertical Lathe, Slant Bed Lathes

Selection of accuracy

- Classes : C, H, P, SP, UP depends on the accuracy of equipment

Determines the size & the number of blocks

- Dynamic load condition
- If accompanied with a ballscrew, the size should be similar to the diameter of ballscrew. For example, if the diameter of the ballscrew is 35mm, then the model size of linear guideway should be HG35

Calculate the max. load of block

- Make reference to load calculation examples, and calculate the max load.
- Be sure that the static safety factor of selected guideway is larger than the rated static safety factor

Choosing preload

- Depends on the stiffness requirement and accuracy of mounting surface

Identify stiffness

- Calculate the deformation (δ) by using the table of stiffness values, choosing heavier preload and larger size linear guideways to enhance the stiffness

Calculating service life

- Calculate the life time requirement by using the moving speed and frequency.
- Make reference to the life calculation example

Selection of lubrication

- Grease supplied by grease nipple
- Oil supplied by piping joint

Completion of selection

1-3 Basic Load Ratings of Linear Guideways

1-3-1 Basic Static Load

(1) Static load rating (C_0)

Localized permanent deformation will be caused between the raceway surface and the rolling elements when a linear guideway is subjected to an excessively large load or an impact load while either at rest or in motion. If the amount of this permanent deformation exceeds a certain limit, it becomes an obstacle to the smooth operation of the linear guideway. Generally, the definition of the basic static load rating is a static load of constant magnitude and direction resulting in a total permanent deformation of 0.0001 times the diameter of the rolling element and the raceway at the contact point subjected to the largest stress. The value is described in the dimension tables for each linear guideway. A designer can select a suitable linear guideway by referring to these tables. The maximum static load applied to a linear guideway must not exceed the basic static load rating.

(2) Static permissible moment (M_0)

The static permissible moment refers to a moment in a given direction and magnitude when the largest stress of the rolling elements in an applied system equals the stress induced by the Static Load Rating. The static permissible moment in linear motion systems is defined for three directions: M_R, M_P and M_Y.

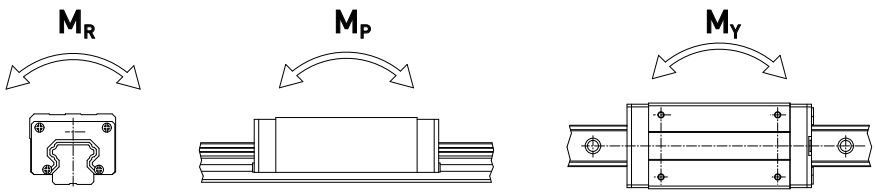

(3) Static safety factor

This condition applys when the guideway system is static or under low speed motion. The static safety factor, which depends on environmental and operating conditions, must be taken into consideration. A larger safety factor is especially important for guideways subject to impact loads (See Table 1-1). The static load can be obtained by using Eq. 1.1

Table 1-1 **Static Safety Factor**

Load Condition	f_{SL} , f_{SM} (Min.)
Normal Load	1.0~3.0
With impacts/vibrations	3.0~5.0

$$f_{SL}=\frac{C_0}{P} \text{ or } f_{SM}=\frac{M_0}{M} \qquad \text{Eq.1.1}$$

f_{SL} : Static safety factor for simple load
f_{SM} : Static safety factor for moment
C_0 : Static load rating (kN)
M_0 : Static permissible moment (kN•mm)
P : Calculated working load (kN)
M : Calculated appling moment (kN•mm)

1-3-2 Basic Dynamic Load

(1) Dynamic load rating (C)

The basic dynamic load rating is an important factor used for calculation of service life of linear guideway. It is defined as the maximum load when the load that does not change in direction or magnitude and results in a nominal life of 50km of operation for a ball type linear guideway and 100km for a roller type linear guideway. The values for the basic dynamic load rating of each guideway are shown in dimension tables. They can be used to predict the service life for a selected linear guideway.

1-4 The Service Life of Linear Guideways

1-4-1 Service Life

When the raceway and the rolling elements of a linear guideway are continuously subjected to repeated stresses, the raceway surface shows fatigue. Flaking will eventually occur. This is called fatigue flaking. The life of a linear guideway is defined as the total distance traveled until fatigue flaking appears on the surface of the raceway or rolling elements.

1-4-2 Nominal Life (L)

The service life varies greatly even when the linear motion guideways are manufactured in the same way or operated under the same motion conditions. For this reason, nominal life is used as the criteria for predicting the service life of a linear motion guideway. The nominal life is the total distance that 90% of a group of identical linear motion guideways, operated under identical conditions, can travel without flaking. When the basic dynamic rated load is applied to a linear motion guideway, the nominal life is 50km.

1-4-3 Calculation of Nominal Life

The acting load will affect the nominal life of a linear guideway. Based on the selected basic dynamic rated load and the actual load. The nominal life of ball type and roller type linear guideway can be calculated by Eq.1.2 and Eq. 1.3 respectively.

Ball type: $$L=\left(\frac{C}{P}\right)^{3}\cdot 50\text{km}=\left(\frac{C}{P}\right)^{3}\cdot 31\text{mile} \qquad \text{Eq.1.2}$$

Roller type: $$L=\left(\frac{C}{P}\right)^{\frac{10}{3}}\cdot 100\text{km}=\left(\frac{C}{P}\right)^{\frac{10}{3}}\cdot 62\text{mile} \qquad \text{Eq.1.3}$$

L : Nominal life
C : Basic dynamic load rating
P : Actual load

If the environmental factors are taken into consideration, the nominal life is influenced greatly by the motion conditions, the hardness of the raceway, and the temperature of the linear guideway. The relationship between these factors is expressed in Eq.1.4 and Eq. 1.5.

Ball type: $$L=\left(\frac{f_h\cdot f_t\cdot C}{f_w\cdot P_c}\right)^{3}\cdot 50\text{km}=\left(\frac{f_h\cdot f_t\cdot C}{f_w\cdot P_c}\right)^{3}\cdot 31\text{mile} \qquad \text{Eq.1.4}$$

Roller type: $$L=\left(\frac{f_h\cdot f_t\cdot C}{f_w\cdot P_c}\right)^{\frac{10}{3}}\cdot 100\text{km}=\left(\frac{f_h\cdot f_t\cdot C}{f_w\cdot P_c}\right)^{\frac{10}{3}}\cdot 62\text{mile} \qquad \text{Eq.1.5}$$

L : Nominal life
f_h : Hardness factor
C : Basic dynamic load rating
f_t : Temperature factor
P_C : Calculated load
f_W : Load factor

1-4-4 Factors of Normal Life

(1) Hardness factor (f_h)

In general, the raceway surface in contact with the rolling elements must have the hardness of HRC 58~62 to an appropriate depth. When the specified hardness is not obtained, the permissible load is reduced and the nominal life is decreased. In this situation, the basic dynamic load rating and the basic static load rating must be multiplied by the hardness factor for calculation.

Raceway hardness

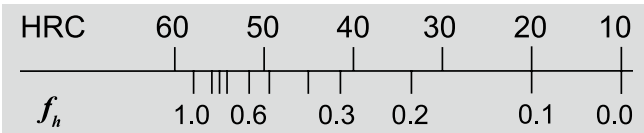

(2) Temperature factor (f_t)

Due to the temperature will affect the material of linear guide, therefore the permissible load will be reduced and the nominal service life will be decreased when over 100°C. Therefore, the basic dynamic and static load rating must be multiplied by the temperature factor. As some accessories are plastic which can't resist high temperature, the working enviornment is recommended to be lower than 100°C.

Temperature

(3) Load factor (f_w)

The loads acting on a linear guideway include the weight of slide, the inertia load at the times of start and stop, and the moment loads caused by overhanging. These load factors are especially difficult to estimate because of mechanical vibrations and impacts. Therefore, the load on a linear guideway should be divided by the empircal factor.

Table 1-2 **Load factor**

Loading Condition	Service Speed	f_w
No impacts & vibration	V ≦ 15 m/min	1 ~ 1.2
Small impacts	15 m/min < V ≦ 60 m/min	1.2 ~ 1.5
Normal load	60m/min < V ≦ 120 m/min	1.5 ~ 2.0
With impacts & vibration	V > 120 m/min	2.0 ~ 3.5

1-4-5 Calculation of Service Life (L_h)

Transform the nominal life into the service life time by using speed and frequency.

Ball type: $$L_h = \frac{L \cdot 10^3}{V_e \cdot 60} = \frac{\left(\frac{C}{P}\right)^3 \cdot 50 \cdot 10^3}{V_e \cdot 60} \text{ hr} \quad \text{Eq.1.6}$$

Roller type: $$L_h = \frac{L \cdot 10^3}{V_e \cdot 60} = \frac{\left(\frac{C}{P}\right)^{\frac{10}{3}} \cdot 100 \cdot 10^3}{V_e \cdot 60} \text{ hr} \quad \text{Eq.1.7}$$

L_h : Service life (hr)
L : Nominal life (km)
V_e : Speed (m/min)
C/P : Load factor

1-5 Applied Loads

1-5-1 Calculation of Load

Several factors affect the calculation of loads acting on a linear guideway (such as the position of the object's center of gravity, the thrust position, and the inertial forces at the time of start and stop). To obtain the correct load value, each load condition should be carefully considered.

(1) Load on one block

Table 1-3 **Calculation example of loads on block**

Patterns	Loads layout	Load on one block
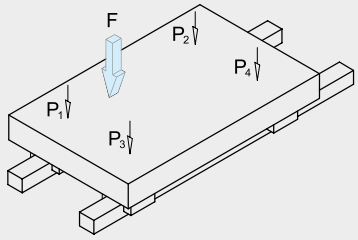	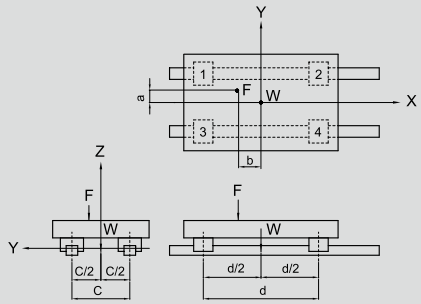	$P_1=\frac{W}{4}+\frac{F}{4}+\frac{F\cdot a}{2c}+\frac{F\cdot b}{2d}$ $P_2=\frac{W}{4}+\frac{F}{4}+\frac{F\cdot a}{2c}-\frac{F\cdot b}{2d}$ $P_3=\frac{W}{4}+\frac{F}{4}-\frac{F\cdot a}{2c}+\frac{F\cdot b}{2d}$ $P_4=\frac{W}{4}+\frac{F}{4}-\frac{F\cdot a}{2c}-\frac{F\cdot b}{2d}$
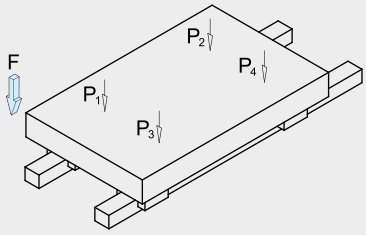	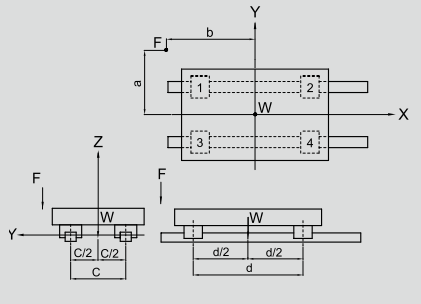	$P_1=\frac{W}{4}+\frac{F}{4}+\frac{F\cdot a}{2c}+\frac{F\cdot b}{2d}$ $P_2=\frac{W}{4}+\frac{F}{4}+\frac{F\cdot a}{2c}-\frac{F\cdot b}{2d}$ $P_3=\frac{W}{4}+\frac{F}{4}-\frac{F\cdot a}{2c}+\frac{F\cdot b}{2d}$ $P_4=\frac{W}{4}+\frac{F}{4}-\frac{F\cdot a}{2c}-\frac{F\cdot b}{2d}$
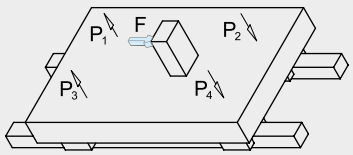	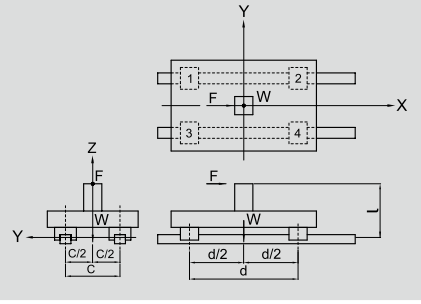	$P_1=P_3=\frac{W}{4}-\frac{F\cdot l}{2d}$ $P_2=P_4=\frac{W}{4}+\frac{F\cdot l}{2d}$
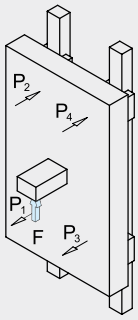	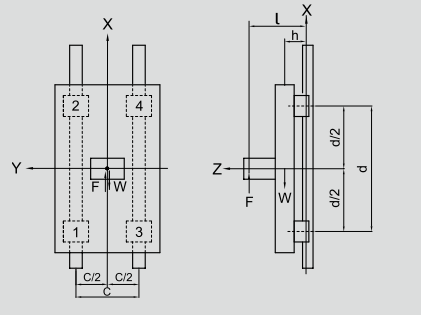	$P_1\sim P_4=-\frac{W\cdot h}{2d}+\frac{F\cdot l}{2d}$
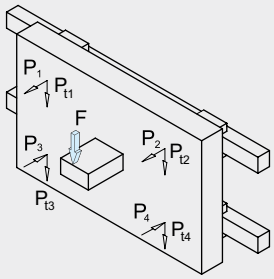	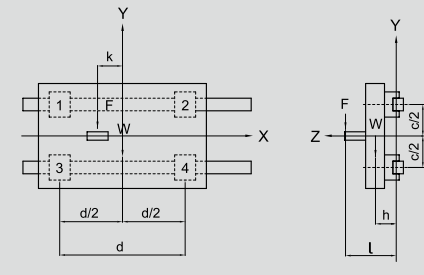	$P_1\sim P_4=-\frac{W\cdot h}{2c}-\frac{F\cdot l}{2c}$ $P_{t1}=P_{t3}=\frac{W}{4}+\frac{F}{4}+\frac{F\cdot k}{2d}$ $P_{t2}=P_{t4}=\frac{W}{4}+\frac{F}{4}-\frac{F\cdot k}{2d}$

W: Applied weight
l: Distance from external force to driver
c: Rail spacing

P_n: Load (radial, reverse radial), n=1~4
F: External force
d: Block spacing

a,b,k: Distance from external force to geometric center
P_{tn}: Load (lateral), n=1~4
h: Distance from center of gravity to driver

(2) Loads with inertia forces

Table 1-4 **Calculation Examples for Loads with Inertia Forces**

Considering the acceleration and deceleration	Load on one block
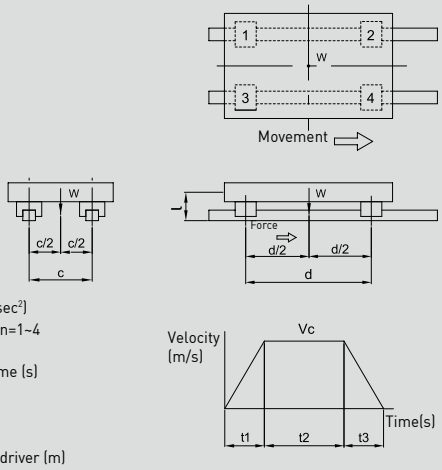 W: Weight of object (N) g: Gravitational acceleration (9.8m/sec^2) P_n: Load (radial, reverse radial) (N), n=1~4 V_c: Maximum speed (m/sec) t1(t3): Acceleration (deceleration) time (s) t2: Constant speed time (s) c: Rail spacing (m) d: Block spacing (m) l: Distance from center of gravity to driver (m)	○ Constant velocity $P_1 \sim P_4 = \frac{W}{4}$ ○ Acceleration $P_1 = P_3 = \frac{W}{4} + \frac{1}{2} \cdot \frac{W}{g} \cdot \frac{V_c}{t1} \cdot \frac{l}{d}$ $P_2 = P_4 = \frac{W}{4} - \frac{1}{2} \cdot \frac{W}{g} \cdot \frac{V_c}{t1} \cdot \frac{l}{d}$ ○ Deceleration $P_1 = P_3 = \frac{W}{4} - \frac{1}{2} \cdot \frac{W}{g} \cdot \frac{V_c}{t3} \cdot \frac{l}{d}$ $P_2 = P_4 = \frac{W}{4} + \frac{1}{2} \cdot \frac{W}{g} \cdot \frac{V_c}{t3} \cdot \frac{l}{d}$

1-5-2 Calculation of The Mean Load for Variable Loading

When the load on a linear guideway fluctuates greatly, the variable load condition must be considered in the life calculation. The definition of the mean load is the load equal to the bearing fatigue load under the variable loading conditions. It can be calculated by using table 1-5.

Table 1-5 **Calculation Examples for Mean Load (P_m)**

Operation Condition	Mean load
Step load 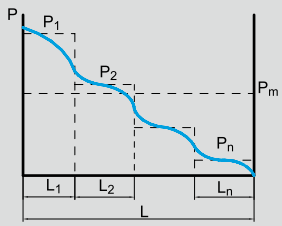	$P_m = \sqrt[3]{1/L(P_1^3 \cdot L_1 + P_2^3 \cdot L_2 + \ldots + P_n^3 \cdot L_n)}$ P_m: Mean load P_n : Stepping L : Total running distance L_n : Running distance under load P_n
Linear variation 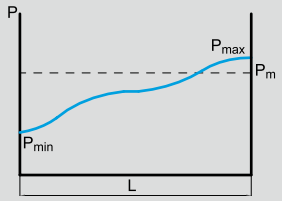	$P_m = 1/3\,(P_{min} + 2 \cdot P_{max})$ P_m : Mean load P_{min} : Min. Load P_{max} : Max. Load
Sinusoidal loading 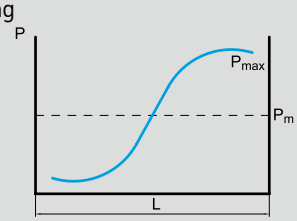	$P_m = 0.65 \cdot P_{max}$ P_m : Mean load P_{max} : Max. Load

1-5-3 Calculation for Bidirectional Equivalent Loads

HIWIN linear guideways can accept loads in several directions simultaneously. To calculate the service life of the guideway when the loads appear in multiple directions, calculate the equivalent load (P_e) by using the equations below.

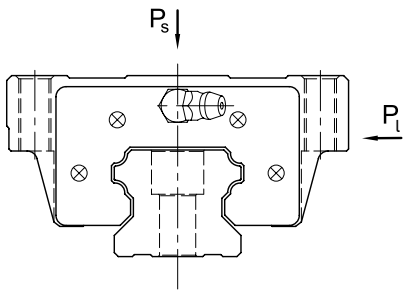

HG/EG/WE/QH/QE/QW/RG/QR/CG/CRG/AG Series

$$P_e = P_s + P_l \quad \text{Eq.1.8}$$

MG Series

when $P_s > P_l$ $\quad P_e = P_s + 0.5 \cdot P_l$ Eq.1.9

when $P_l > P_s$ $\quad P_e = P_l + 0.5 \cdot P_s$ Eq.1.10

1-5-4 Calculation Example for Service Life

A suitable linear guideway should be selected based on the acting load. The service life is calculated from the ratio of the working load and the basic dynamic load rating.

Table 1-6 **Calculation Example for Service Life**

Type of Linear Guideway	Dimension of device	Operating condition
Type: HGH 30 CA	d : 600 mm	Weight (W) : 15 kN
C : 38.74 kN	c : 400 mm	Acting force (F) : 1 kN
C_0 : 52.19 kN	h : 200 mm	Temperature: normal temperature
Preload: Z0	l : 250 mm	Load status: normal load

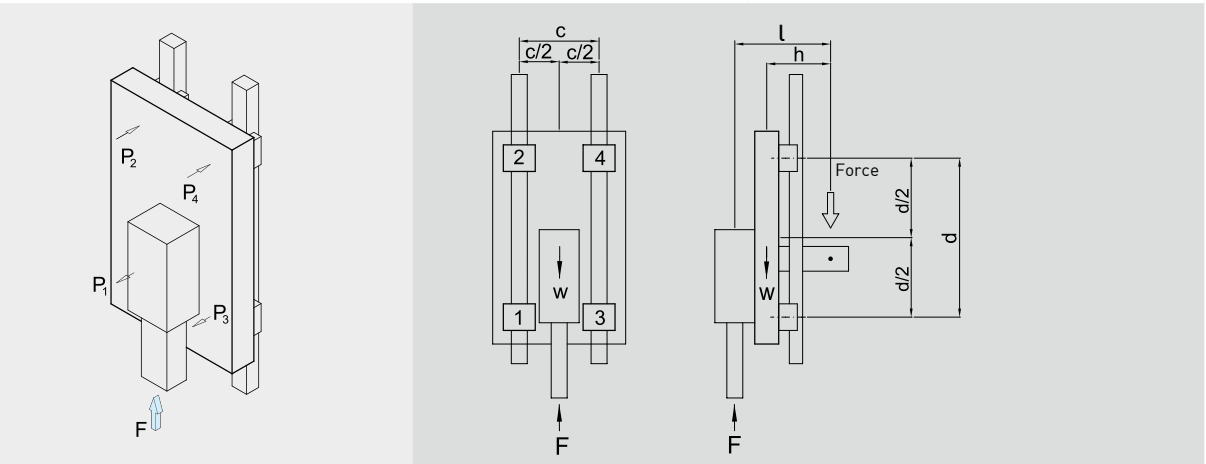

- Calculation of acting loads

$$P_1 \sim P_4 = + \frac{W \times h}{2d} - \frac{F \times l}{2d} = + \frac{15 \times 200}{2 \times 600} - \frac{1 \times 250}{2 \times 600} = 2.29\,(kN)$$

$$P_{max} = |P_1 \sim P_4| = 2.29\,(kN)$$

- Because preload is Z0, $P_c = P_{max} = 2.29\,(kN)$

Note: The larger preload (ZA, AB) will increase the rigidity, but decrease the nominal life of guideway.

- Calculation for life L

$$L = \left(\frac{f_h \times f_t \times C}{f_w \times P_c}\right)^3 \times 50 = \left(\frac{1 \times 1 \times 38.74}{2 \times 2.29}\right)^3 \times 50 = 30{,}258\ (km)$$

1-6 Friction

As mentioned in the preface, a linear guideway allows a type of rolling motion, which is achieved by using balls or rollers. The coefficient of friction for a linear guideway can be as little as 1/50 of a traditional slide. Generally, the coefficient of friction of ball type linear guideway is about 0.004 and roller type is about 0.003 .

When a load is 10% or less than the basic static load rate, the most of the resistance comes from the grease viscosity and frictional resistance between balls. In contrast, if the load is more than the basic static load rating, the resistance will mainly come from the load.

$$F = \mu \cdot W + S \qquad \text{Eq.1.11}$$

F : Friction (kN)
S : Friction resistance (kN)
μ : Coefficient of friction
W : Normal loads (kN)

1-7 Preload and Stiffness

With linear guideways, the block can be preloaded to increase stiffness and the internal preload must be considered in the life calculation. Preload is classified by three classes; Z0, ZA, ZB. Each preload level has a different deformation of the block, higher stiffness presents lower deformation. Stiffness in three axis are used by most applications. The definition of stiffness examples shown below:

$$k = \frac{P}{\delta}$$

δ : Deformation (μm)
P : Applied load (N)
k : Stiffness (N/μm)

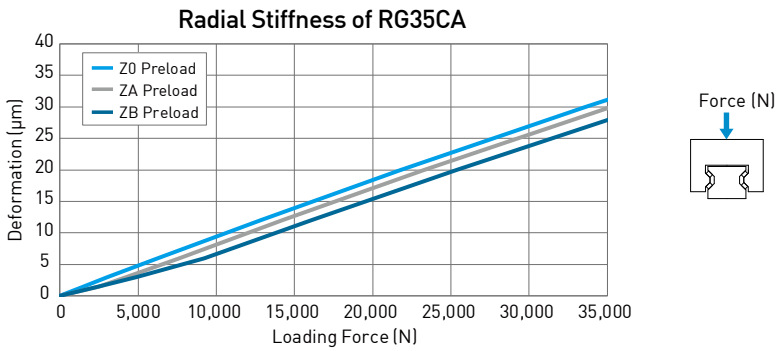

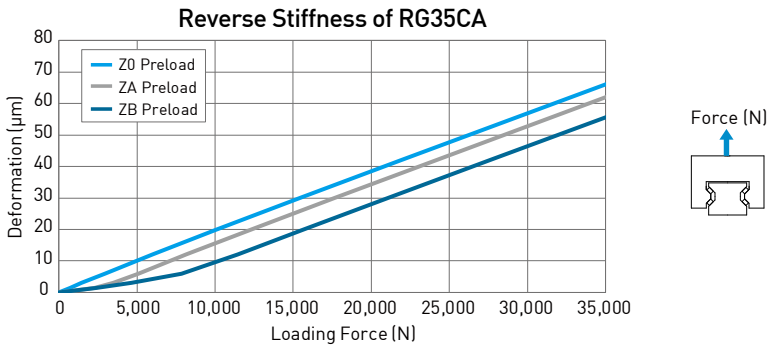

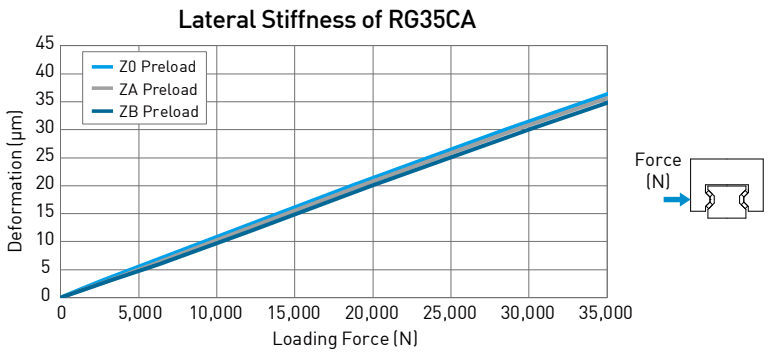

1-8 Lubrication

Supplying insufficient lubrication to the guideway will greatly reduce the service life due to an increase in rolling friction. The lubricant provides the following functions;

- Reduces the rolling friction between the contact surfaces to avoid abrasion and surface burning of the guideway.
- Generates a lubricant film between the rolling surfaces and decreases fatigue.
- Anti-corrosion.

1-8-1 Grease

Linear guideway must be lubricated with the lithium soap based grease before installation. After the linear guideway is installed, we recommend that the guideway be re-lubricated every 100 km. It is possible to carry out the lubrication through the grease nipple. Generally, grease is applied for speeds that do not exceed 60 m/min faster speeds will require high-viscosity oil as a lubricant.

$$T=\frac{100 \cdot 1000}{V_e \cdot 60}\ \text{hr} \qquad \text{Eq.1.12}$$

T : Feeding frequency of oil (hour)
V_e : speed (m/min)

1-8-2 Oil

The recommended viscosity of oil is about 30~150cSt. The standard grease nipple may be replaced by an oil piping joint for oil lubrication. Since oil evaporates quicker than grease, the recommended oil feed rate is approximate 0.3cm^3/hr.

1-9 The Butt-joint Rail

Jointed rail should be installed by following the arrow sign and ordinal number which is marked on the surface of each rail.
For matched pair, jointed rails, the jointed positions should be staggered. This will avoid accuracy problems due to discrepancies between the 2 rails (see figure).

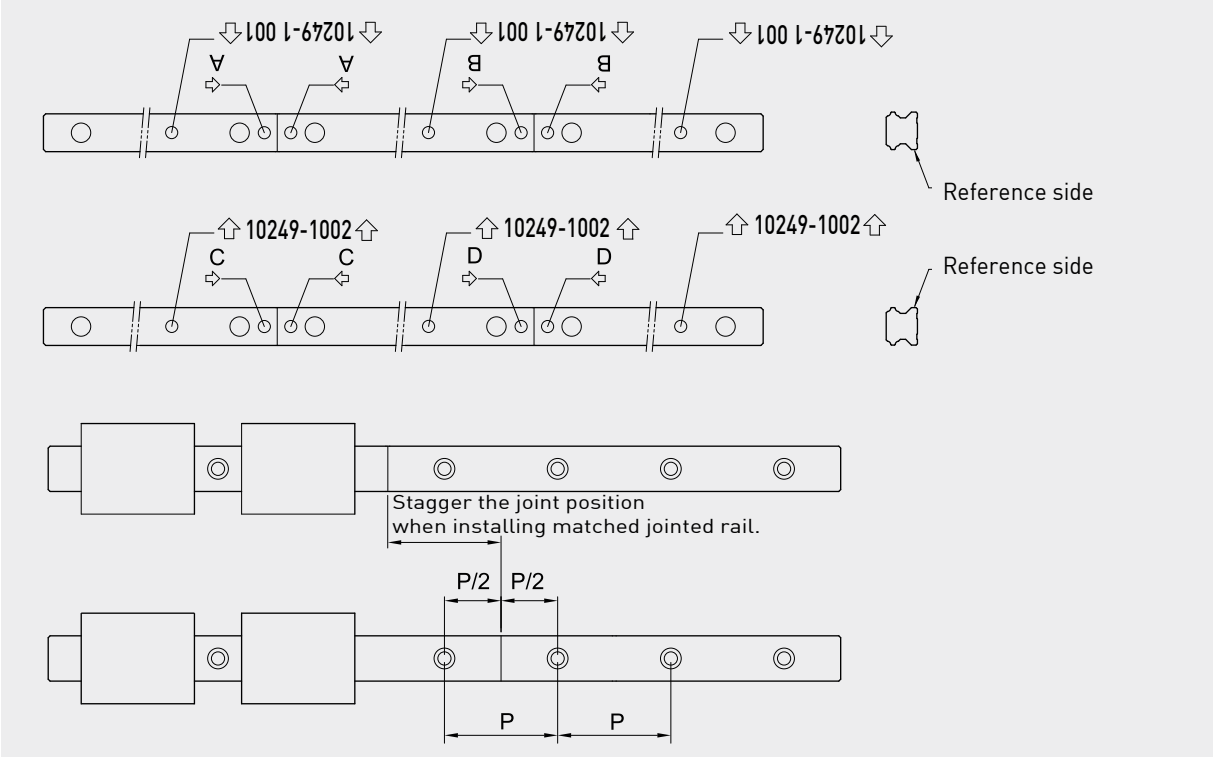

1-10 Mounting Configurations

Linear guideways have equal load ratings in the radial, reverse radial and lateral directions.
The application depends on the machine requirements and load directions.
Typical layouts for linear guideways are shown below:

Use of one rail and mounting reference side

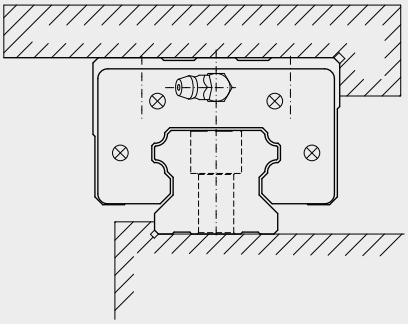

use of two rails(block movement)

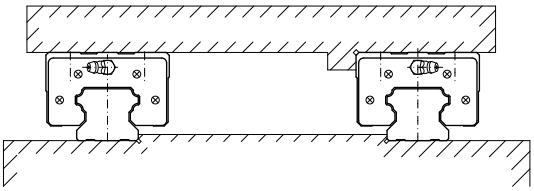

use of two rails(block fixed)

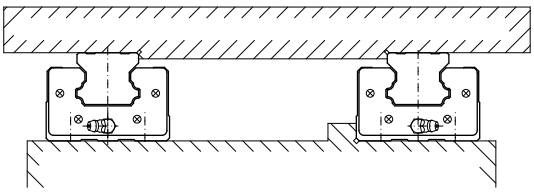

use of two external rails

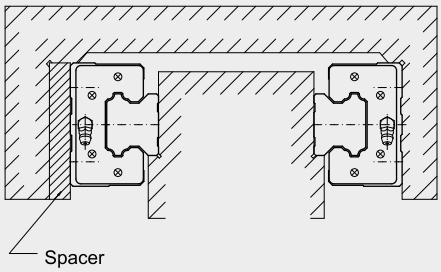

use of two internal rails

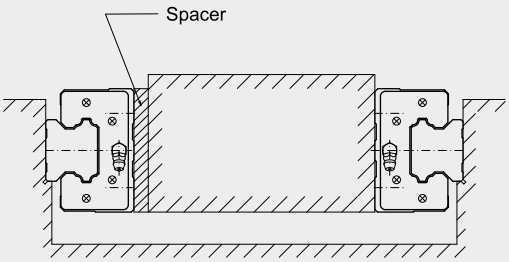

total surface fixed installation

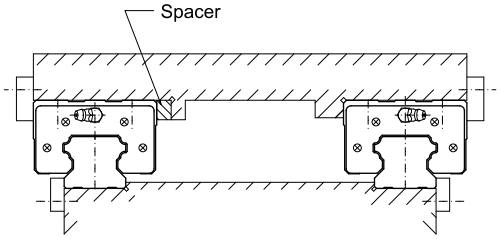

HGW type block with mounting holes in different directions.

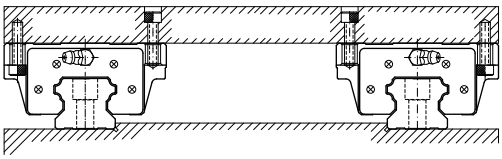

1-11 Mounting Procedures

Three installation methods are recommended based on the required running accuracy and the degree of impacts and vibrations.

1-11-1 Master and Subsidiary Guide

For non-interchangeable type Linear Guideways, there are some differences between the master guide and subsidiary guide. The accuracy of the master guide's datum plane is better than the subsidiary's and it can be a reference side for installation. There is a mark "MA" printed on the rail, as shown in the figure below.

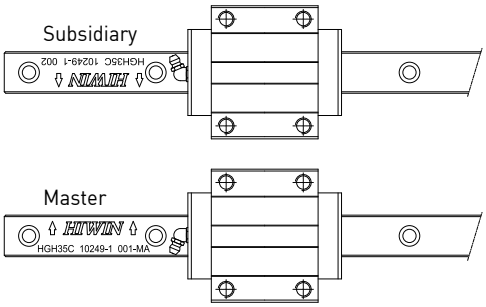

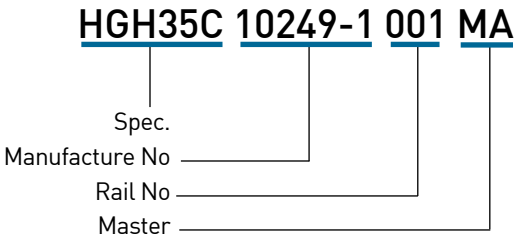

1-11-2 Installation to Achieve High Accuracy and Rigidity

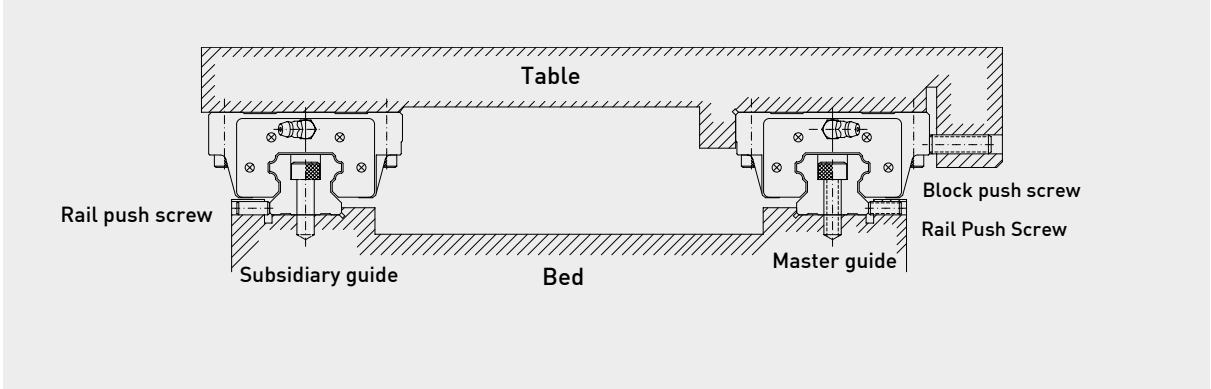

(1) Mounting methods

It is possible that the rails and the blocks will be displaced when the machine is subjected to vibrations and impacts. To eliminate these difficulties and achieve high running accuracy, the following four methods are recommended for fixing.

Mounting with a push plate

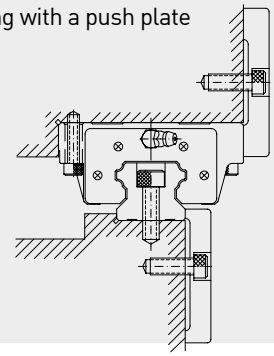

Mounting with push screws

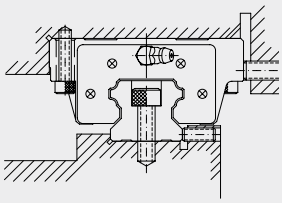

Mounting with taper gib

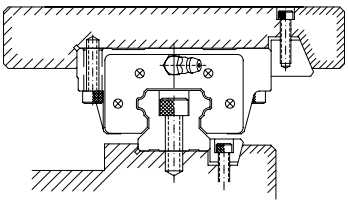

Mounting with needle roller

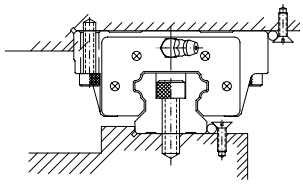

(2) Procedure of rail installation

1 Before starting, remove all dirt from the mounting surface of the machine.

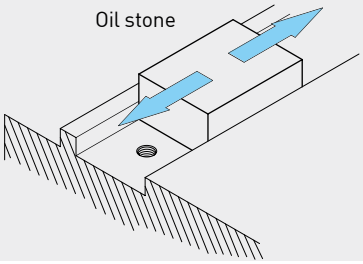

2 Place the linear guideway gently on the bed. Bring the guideway into close contact with the datum plane of the bed.

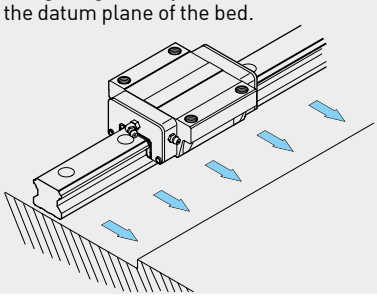

3 Check for correct thread engagement when inserting a bolt into the mounting hole while the rail is being placed on the mounting surface of the bed.

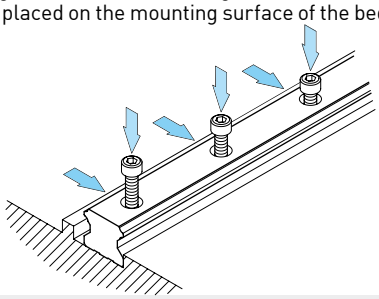

4 Tighten the push screws sequentially to ensure close contact between the rail and the side datum plane.

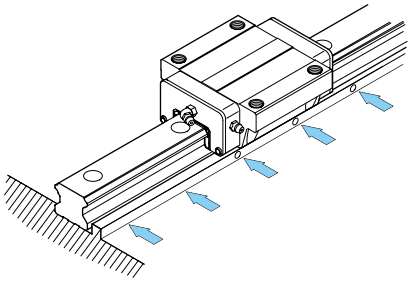

5 Tighten the mounting bolts with a torque wrench to the specified torque.

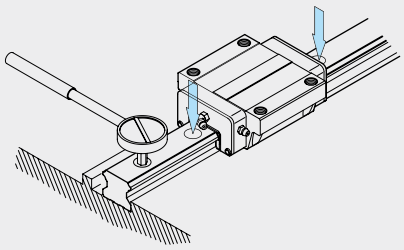

6 Install the remaining linear guideway in the same way.

(3) Procedure of block installation

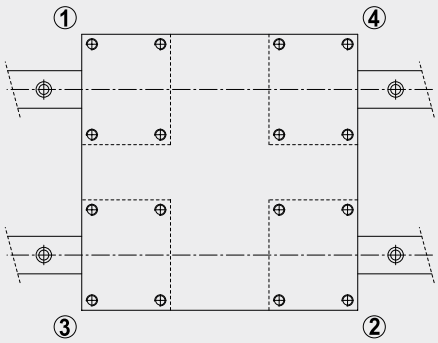

- Place the table gently on the blocks. Next, hand-tighten the block mounting bolts temporarily.
- Push the blocks against the datum plane of the table and position the table by tightening the push screws.
- The table can be fixed uniformly by tightening the mounting bolts on master guide side and subsidiary side in 1 to 4 sequences.

1-11-3 Installation of the Master Guide without Push Screws

To ensure parallelism between the subsidiary guide and the master guide without push screws, the following rail installation methods are recommended. The block installation is the same as mentioned previously.

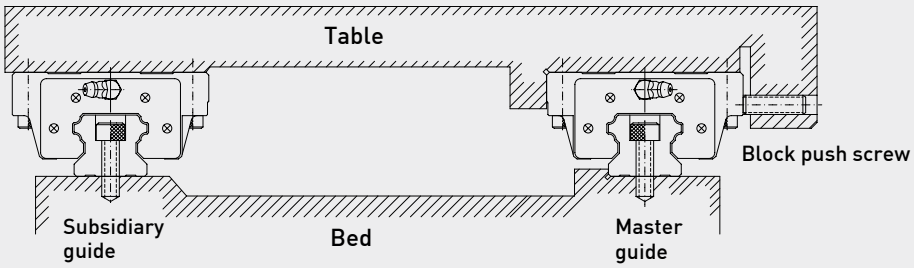

(1) Installation of the rail on the subsidiary guide side

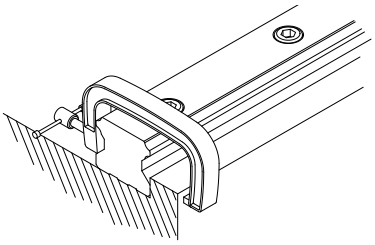

- **Using a vice**
  Place the rail into the mounting plane of the bed. Tighten the mounting bolts temporarily; then use a vice to push the rail against the side datum plane of the bed. Tighten the mounting bolts in sequence to the specified torque.

(2) Installation of the rail on the subsidiary guide side

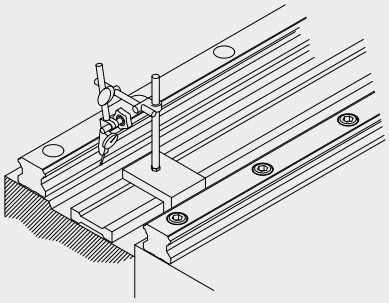

- **Method with use of a straight edge**
  Set a straight edge between the rails parallel to the side datum plane of the rail on the master guide side by using a dial gauge. Use the dial gauge to obtain the straight alignment of the rail on the subsidiary guide side. When the rail on the subsidiary guide side is parallel to the master side, tighten the mounting bolts in sequence from one end of the rail to the other.

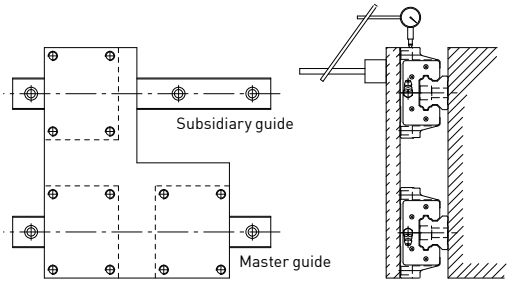

- **Method with use of a table**
  Fix two blocks on the master guide side to the table. Temporarily fix the rail and one block on the subsidiary guide side to the bed and the table. Fix a dial gauge stand on the table surface and bring it into contact with the side of the block on the subsidiary guide side. Move the table from one end of the rail to the other. While aligning the rail on the subsidiary side parallel to the rail on the master guide side, tighten the bolts in sequence.

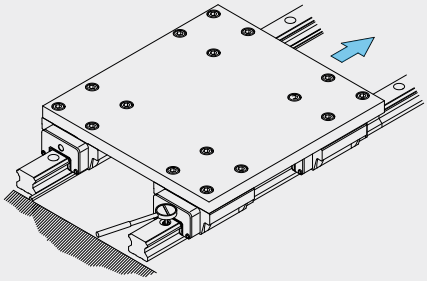

- **Method following the master guide side**
  When a rail on the master guide side is correctly tightened, fix both blocks on the master guide side and one of the two blocks on the subsidiary guide side completely to the table.
  When moving the table from one end of the rail, tighten the mounting bolts on the subsidiary guide side completely.

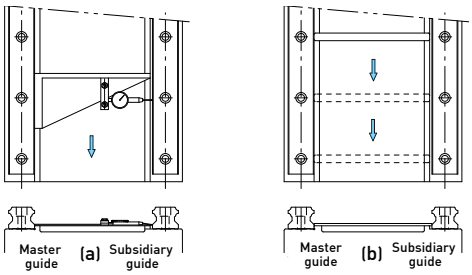

- **Method with use of a jig**
  Use a special jig to ensure the rail position on the subsidiary guide side. Tighten the mounting bolts to the specified torque in sequence.

1-11-4 Installation Without Side Surface

To ensure parallelism between the subsidiary guide and the master guide when there is no side surface, the following rail installation method is recommended. The installation of the blocks is the same as mentioned previously.

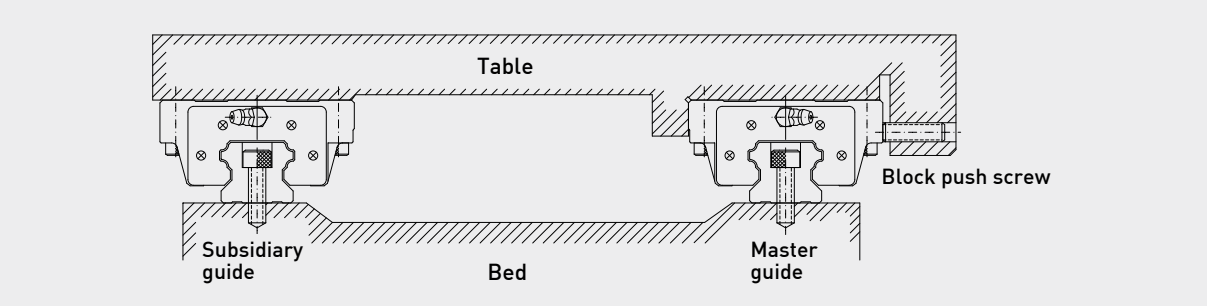

(1) Installation of the rail on the master guide side

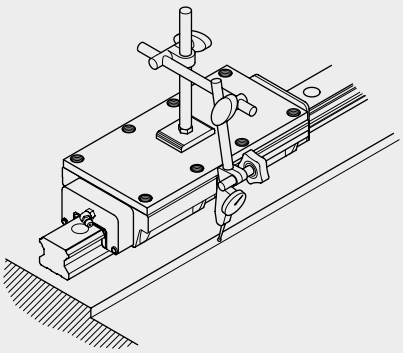

- **Using a provisional datum plane**
  Two blocks are fixed in close contact by the measuring plate. A datum plane provided on the bed is used for straight alignment of the rail from one end to the other. Move the blocks and tighten the mounting bolts to the specified torque in sequence.

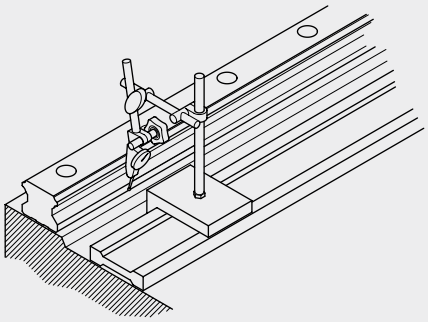

- **Method with use of a straight edge**
  Use a dial gauge and a straight edge to confirm the straightness of the side datum plane of the rail from one end to the other. Make sure the mounting bolts are tightened securely in sequence.

(2) Installation of the rail on the subsidiary guide side

The method of installation for the rail on the subsidiary guide side is the same as the case without push screws.

1-11-5 Linear Guideway Mounting Notifications

1. HIWIN guideways are applied with rust-proof oil before shipping. Please clean the oil before moving or running the blocks.

2. Recognition of master and subsidiary rails: For non-interchangeable type linear guideways, there are some differences between the master rail and subsidiary rail. The accuracy of the master rail's datum plane is better than the subsidiary's and it can be a reference side for installation. There is a mark "MA" printed on the rail. Check for the correct order before starting the installation. The rail number of master is an odd number and the rail number of subsidiary is an even number. Please install the rails according to the indication and carry on the installation according to the order for multi-rails installment (e.g.: 001 pairs 002 ; 003 pairs 004 etc.)
3. Recognition of datum plane: The datum plane (B) of rail is the side indicated by the arrow, which is marked on the top surface of the rail. The datum plane of block is smooth ground surface which shows as D in Figure 2.

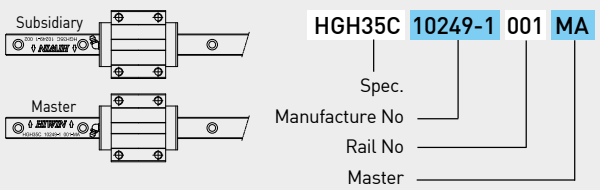

(Figure 1)

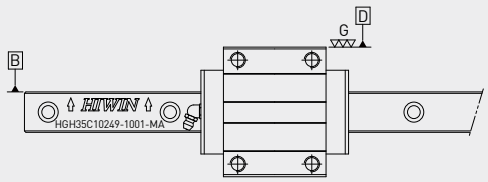

(Figure 2)

4. Butt-joint rail: Butt-joint rail should be installed by following the arrow sign and ordinal number which is marked on the surface of each rail as shown in the figure 3. To avoid accuracy problems due to discrepancies between the 2 rails such as for matched pair, butt-joint rails, the jointed positions should be staggered as shown in figure 4.

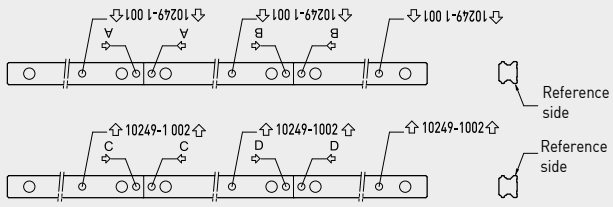

(Figure 3)

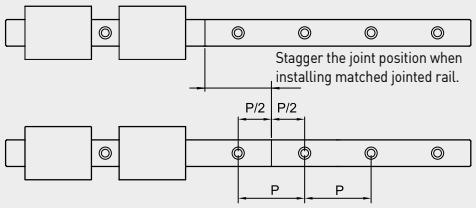

(Figure 4)

5. Do not remove blocks from rails when assembling the guideways. HIWIN recommends using block inserts (please see Figure 5) if it is necessary to remove/ mount block from/ onto rail.

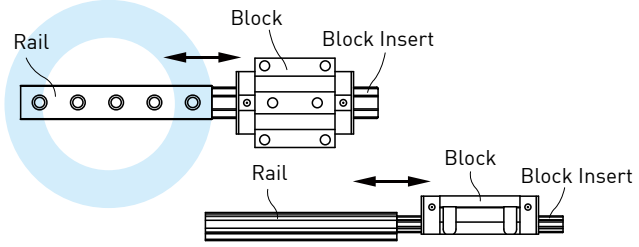

6. HIWIN recommends not randomly mixing block units and rails for non interchangeable type to avoid any installation problem.
7. To ensure the straightness of rail, please tighten the mounting bolts sequentially with a torque wrench to the specified torque.(Refer to HIWIN Technical Information).

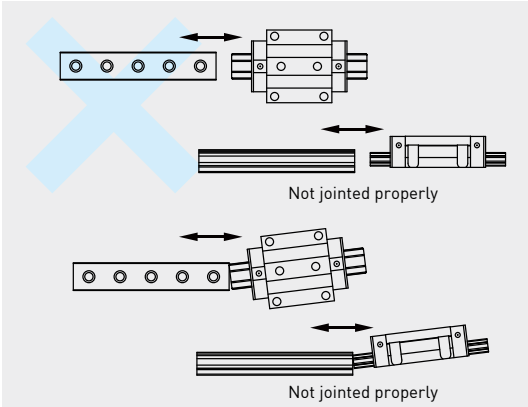

(Figure 5)

1-11-6 Linear Guideway Usage Instructions

To ensure a long lifetime and running accuracy of the linear guideways after assembly, it is recommended to cover the rail roles with caps.

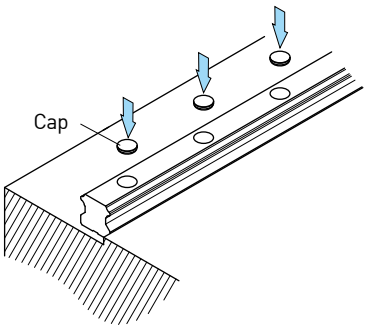

1. Put the caps into the bolt hole.

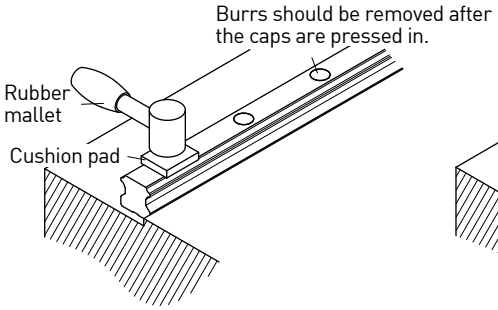

2. Use the cushion pad and rubber mallet to flush the caps and make it even with the bolt holes.

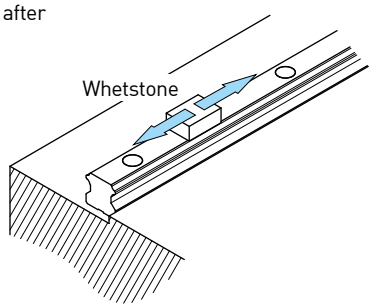

3. When the caps are fitted into the bolt holes, please smoothen the top surface of the cpas and make sure no burs remained and not higher than the rail.

1-11-7 Linear Guideway Usage Instructions

1. Lubricate the blocks after assembling the guideways in machines. Use a lithium soap-base grease or oil.
2. The guideways are packaged with anti-corrosion oil before delivery. If the rails were cleaned before installation, remember to lubricate the rails after assembling the guideways in machine.(Please confirm the compatibility between lubricant & anti rust rail)
3. The blocks are composed of various plastic parts, please avoid prolonged exposure of these parts with any organic solvent when cleaning the blocks to prevent possible damage.
4. Try to avoid any foreign objects from getting into the block as this could result in damage to the product.
5. Please do not disassemble the parts, the incautious actions of disassembly may bring foreign objects into the block and diminish the precision of the guideways or cause possible damage.
6. When handling the guideways please hold them horizontally. Improper handling can cause the blocks to fall off the rail.
7. Please avoid the inappropriate falling or clash on the blocks, which will damage the function of guideways.
8. For special application conditions, please apply the appropriate surface treatment or refer to the Linear Guideway Technical Information catalog for more detailed instructions.
9. The operating temperature range of the E2 type (Self lubricant kit) is -10℃~ 50℃. For Q1 types (Quiet linear guideway), the range is -10℃~80℃. The maximum service temperature of the SE type (Metallic end cap) is 150℃ and for other standard types it is 100℃.
10. Please refer to the Linear Guideway Technical Information catalog for more detailed instructions. Please do not hesitate to contact HIWIN if there are further questions related to the application.

Note: For Q1 type guideways (QH & QE), please pay attention to the following instructions:

1. When assembling and disassembling the Q1 blocks, please use the block insert that is provided. (one block insert is equipped per block).
2. Special accessories are used in the Q1 type guideways, any adjustment on the preload is prohibited.
3. For some of our Q1 type Linear Guideways, the boreholes for fixing the slider on the block are connected with recirculation channels. Therefore please pay attention to the length of screws, to avoid the screw with longer length might interfere the recirculation parts and influence the operating performance.

Specification	Max. length of screws M x L (mm)
QHH20	M5 x 6
QHH25	M6 x 8
QHH30	M8 x 10
QHH35	M8 x 12
QEH20	M5 x 7
QEH25	M6 x 9
QEH30	M8 x 10
QWH27	M6 x 6
QWH35	M8 x 8

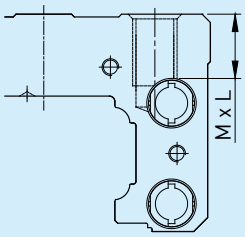

2. HIWIN Linear Guideway Product Series

In an effort to meet customer's requirement and service needs HIWIN offers several different types of guides. We supply the HG series which is suitable for CNC machineries, the EG series for automation industries, the WE series for single axis equipment, the RG series for high rigidity applications, and the miniature series, MGN/MGW, for medical devices and semiconductor equipment. Also for high technology industries, HIWIN has developed the QH and QE series with high speed and quiet characteristics.

(1) Types & series

Table 2-1 **Types & Series**

Series	Assembly Height	Load	Square Tap hole	Flange Tap hole	Flange Drilled hole	Flange Combination
HG	High	Heavy Load	HGH-CA	-	-	-
		Super Heavy Load	HGH-HA	-	-	-
	Low	Heavy Load	HGL -CA	HGW-CA	HGW-CB	HGW-CC
		Super Heavy Load	HGL -HA	HGW-HA	HGW-HB	HGW-HC
EG	Low	Medium Load	EGH -SA	EGW-SA	EGW-SB	-
		Heavy Load	EGH -CA	EGW-CA	EGW-CB	-
WE	Low	Heavy Load	WEH-CA	-	-	WEW-CC
MGN	-	Standard	MGN-C	-	-	-
		Long	MGN-H	-	-	-
MGW	-	Standard	MGW-C	-	-	-
		Long	MGW-H	-	-	-
MGN-O	-	Standard	MGN-C-O	-	-	-
		Long	MGN-H-O	-	-	-
MGW-O	-	Standard	MGW-C-O	-	-	-
		Long	MGW-H-O	-	-	-
QH	High	Heavy Load	QHH-CA	-	-	-
		Super Heavy Load	QHH-HA	-	-	-
	Low	Heavy Load	-	QHW-CA	QHW-CB	QHW-CC
		Super Heavy Load	-	QHW-HA	QHW-HB	QHW-HC
QE	Low	Medium Load	QEH -SA	QEW-SA	QEW-SB	-
		Heavy Load	QEH -CA	QEW-CA	QEW-CB	-
QW	Low	Heavy Load	QWH-CA	-	-	QWW-CC
CG	High	Heavy Load	CGH-CA	-	-	-
		Super Heavy Load	CGH-HA	-	-	-
	Low	Heavy Load	CGL-CA	-	-	CGW-CC CGW-CA[1]
		Super Heavy Load	CGL-HA	-	-	CGW-HC CGW-HA[1]
RG	High	Heavy Load	RGH-CA	-	-	-
		Super Heavy Load	RGH-HA	-	-	-
	Low	Heavy Load	RGL-CA	-	-	RGW-CC
		Super Heavy Load	RGL-HA	-	-	RGW-HC
	Ultra low	Heavy Load	RGS-CA	-	-	RGF-CC
		Super Heavy Load	RGS-HA	-	-	RGF-HC
QR	High	Heavy Load	QRH-CA	-	-	-
		Super Heavy Load	QRH-HA	-	-	-
	Low	Heavy Load	QRL-CA	-	-	QRW-CC
		Super Heavy Load	QRL-HA	-	-	QRW-HC
CRG	High	Heavy Load	CRGH-CA	-	-	-
		Super Heavy Load	CRGH-HA	-	-	-
	Low	Heavy Load	CRGL-CA	-	-	CRGW-CC
		Super Heavy Load	CRGL-HA	-	-	CRGW-HC
AG	-	Heavy Load	AG-C	-	-	-
	-	Super Heavy Load	AG-H	-	-	-

Note : (1) For CGW-CA/HA ,The amount of block mounting holes is four.
For CGW-CC/HC ,The amount of block mounting holes is six.
Both types can be mounting from top or bottom.

(2) Accuracy classes

Table 2-2 **Accuracy Classes**

Series	Assembly Type					Interchangeable Type		
	Normal (C)	High (H)	Precision (P)	Super Precision (SP)	Ultra Precision (UP)	Normal (C)	High (H)	Precision (P)
HG	●	●	●	●	●	●	●	●
EG	●	●	●	●	●	●	●	●
WE	●	●	●	●	●	●	●	●
MGN	●	●	●	-	_	●	●	●
MGW	●	●	●	-	-	●	●	●
MGN-O	●	●	●	-	-	●	●	●
MGW-O	●	●	●	-	-	●	●	●
QH	●	●	●	●	●	●	●	●
QE	●	●	●	●	●	●	●	●
QW	●	●	●	●	●	●	●	●
CG	●	●	●	●	●	●	●	●
RG	-	●	●	●	●	-	●	●
QR	-	●	●	●	●	-	●	●
CRG	-	●	●	●	●	-	●	●
AG	-	-	●	-	-	-	-	-

(3) Classification of preload

Table 2-3 **Preload**

Series	Non-interchangeable Type			Interchangeable Type	
	Light preload (Z0)	Medium Preload (ZA)	Heavy Preload (ZB)	Light Preload (Z0)	Medium Preload (ZA)
HG	●	●	●	●	●
EG	●	●	●	●	●
WE	●	●	●	●	●
QH	●	●	●	●	●
QE	●	●	●	●	●
QW	●	●	●	●	●
CG	●	●	●	●	●
AG	●	●	●	-	-

Series	Non-interchangeable Type			Interchangeable Type	
	Very Light Preload (Z0)	Medium Preload (ZA)	Heavy Preloa (ZB)	Very Light Preload (Z0)	Light Preload (ZA)
RG	●	●	●	●	●
QR	●	●	●	●	●
CRG	●	●	●	●	●

Series	Non-interchangeable Type			Interchangeable Type		
	Light Clearance (ZF)	Very Ligh Preload (Z0)	Light Preload (Z1)	Light Clearance (ZF)	Very Ligh Preload (Z0)	Light Preload (Z1)
MGN	●	●	●	●	●	●
MGW	●	●	●	●	●	●
MGN-O	●	●	●	●	●	●
MGW-O	●	●	●	●	●	●

(4) Recommended accuracy grade for machine applications

Application Grade		AXIS	Accuracy Grade				
			C	H	P	SP	UP
CNC Machinery Tools	Lathes	X			●	●	●
		Z			●	●	
	Milling Machines Boring Machines	X				●	●
		Y			●	●	
		Z			●	●	
	Machine Center	X			●	●	●
		Y			●	●	●
		Z			●	●	
	Jig Borers	X					●
		Y					●
		Z					●
	Drilling Machines	X			●		
		Y			●		
		Z		●	●		
	Grinders	X				●	●
		Y			●	●	
	EDM	X			●	●	
		Y			●	●	
		Z			●		
	Wire Cut EDM	X				●	
		Y				●	
		U			●	●	
		V			●	●	
	Laser Cutting Machine	X			●		
		Y			●		
		Z			●		
General Machinery	Punching Press	X		●	●		
		Y		●	●		
	Single Purpose Machines			●	●	●	
	Wood Working Machines		●	●			
	Industrial Robot (Precision)				●	●	
	Industrial Robot (General)		●	●	●		
	Coordinate Measuring Machine					●	●
	Non-CNC Machine				●		
	Transport Equipment		●	●	●		
	X-Y Table				●	●	●
	Linear Actuator		●	●	●		
	Aircraft Landing Gear			●	●		
	Airfoil Control			●	●		
	Gate Valve		●	●			
	Power Steering			●			
	Glass Grinder				●	●	
	Surface Grinder				●		
	Induction Hardening Machine		●	●			
	Electromachine				●	●	●
	All-electric Injection Molding Machine		●	●	●		

HG Series

Heavy Load Ball Type

2-1 HG Series - Heavy Load Ball Type Linear Guideway

HG series linear guideways are designed with load capacity and rigidity higher than other similar products with circular-arc groove and structure optimization. It features equal load ratings in the radial, reverse radial and lateral directions, and self-aligning to absorb installation-error. Thus, HIWIN HG series linear guideways can achieve a long life with high speed, high accuracy and smooth linear motion.

2-1-1 Features of HG Series

(1) Self-aligning capability

By design, the circular-arc groove has contact points at 45 degrees. HG series can absorb most installation errors due to surface irregularities and provide smooth linear motion through the elastic deformation of rolling elements and the shift of contact points. Self-aligning capability, high accuracy and smooth operation can be obtained with an easy installation.

(2) Interchangeability

Because of precision dimensional control, the dimensional tolerance of HG series can be kept in a reasonable range, which means that any blocks and any rails in a specific series can be used together while maintaining dimensional tolerance. And a retainer is added to prevent the balls from falling out when the blocks are removed from the rail.

(3) High rigidity in all four directions

Because of the four-row design, the HG series linear guideway has equal load ratings in the radial, reverse radial and lateral directions. Furthermore, the circular-arc groove provides a wide-contact width between the balls and the groove raceway allowing large permissible loads and high rigidity.

2-1-2 Construction of HG Series

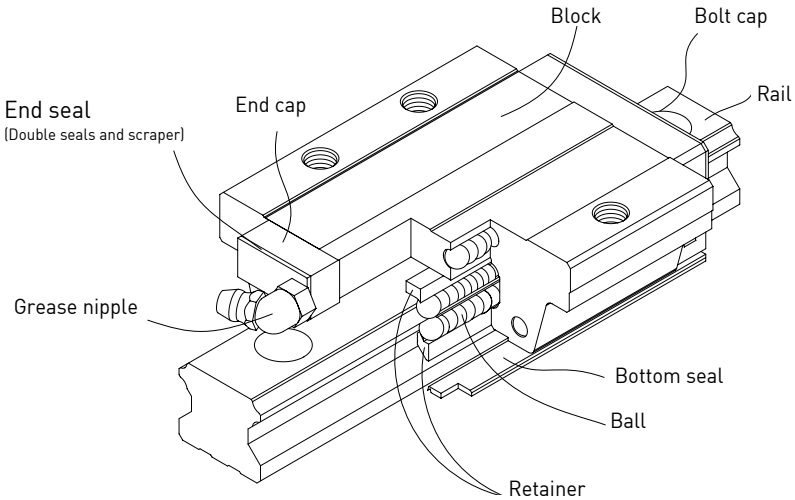

- Rolling circulation system: Block, Rail, End Cap and Retainer
- Lubrication system: Grease Nipple and Piping Joint
- Dust protection system: End seal, Bottom Seal, Bolt Cap, Double Seals and Scraper

2-1-3 Model Number of HG Series

HG series guideways can be classified into non-interchangeable and interchangeable types. The sizes are identical. The only difference between the two types is that the interchangeable type of blocks and rails can be freely exchanged, and their accuracy can reach up to P class. The model number of HG series contains the size, type, accuracy class, preload class, etc..

(1) Non-interchangeable type

HG W 25 C A E 2 R 1600 E ZA P M II + DD/E2+RC

- HG Series
- Block Type
  - W : Flange Type
  - H : Square Type
  - L : Square Type (Low)[3]
- Model size
  - 15, 20, 25, 30, 35, 45, 55, 65
- Load Type
  - C : Heavy Load
  - H : Super Heavy Load
- Block Mounting
  - A : Mounting From Top
  - B : Bottom
  - C : Top or Bottom
- E: Special Block
  - None: Standard Block
- No. of Blocks per Rail
- Rail Mounting Type
  - R : Mounting From Top, T : Bottom
- Rail Length (mm)
- E: Special Rail
  - None: Standard Rail
- Preload Code: Z0, ZA, ZB
- Precision Code:
  - C, H, P, SP, UP
- Meterial[4]: No symbol M
- No.of rails per axis set[1]
- Dust Protection[2]
  - E2: Self-Lubricant
  - SE: Metallic End Cap
- RC:Reinforced Cap

Note: 1. The roman numerals express a matched set of rails.
2. No symbol indicates standard protection (end seal and bottom seal).
ZZ : End seal, bottom seal and scraper
KK: Double seals, bottom seal and scraper.
DD: Double seals and bottom seal
3. Block type HGL is the low profile design of HGH (square type), the assembled height is same as HGW (flange type) in same size.
4. No symbol: Carbon Steel / M: Stainless Steel
5. The stainless steel is available for HG15C、HG20C、HG25C.

(2) Interchangeable type

Model Number of HG Block

HG W 25 C A E ZA P M + DD/E2

- HG Series
- Block Type
  - W : Flange Type
  - H : Square Type
  - L : Square Type[3]
- Model size
  - 15, 20, 25, 30, 35, 45, 55, 65
- Load Type
  - C : Heavy Load
  - H : Super Heavy Load
- Block Mounting Type
  - A : Mounting From Top
  - B : Bottom, C : Top or Bottom
- E: Special Block
  - None: Standard Block
- Preload Code : Z0, ZA
- Precision Code : C, H, P
- Meterial[4]: No symbol M
- Dust Protection[2]
- E2: Self-Lubricant
  - SE: Metallic End Cap

Model Number of HG Rail

HG R 25 R 1600 E P M + RC

- HG Series
- Interchangeable Rail
- Model size
  - 15, 20, 25, 30, 35, 45, 55, 65
- Rail Mounting Type
  - R : Mounting From Top
  - T : Bottom
- Rail Length (mm)
- E: Special Rail,
  - None: Standard Rail
- Precision Code : C, H, P
- Meterial[4]: No symbol M
- RC:Reinforced Cap

HG Series

Heavy Load Ball Type

2-1-4 Types

(1) Block types

There're two types of blocks:flange and square. The flange type is suitable for heavy moment load application because of the lower assembly height and wider mounting surface.

Table 2-1-1 **Block Types**

Type	Model	Shape	Height (mm)	Rail Length (mm)	Main Application
Square	HGH-CA HGH-HA	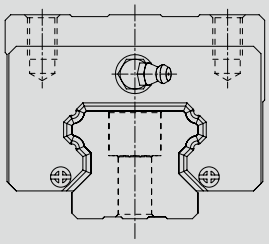	28 ↓ 90	100 ↓ 4000	○ Machine Centers ○ NC Lathes ○ Grinding Machines ○ Precision Machining Machines ○ Heavy Cutting Machines ○ Automation Devices ○ Transportation Equipment ○ Measuring Equipment ○ Devices Requiring High Positional Accuracy
	HGL-CA HGL-HA	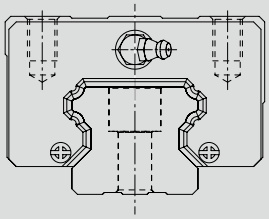	24 ↓ 70	100 ↓ 4000	
Flange	HGW-CA HGW-HA	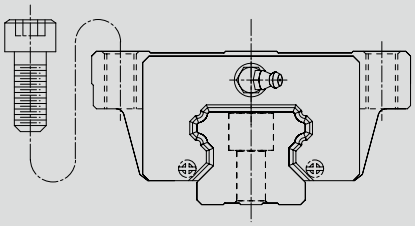	24 ↓ 90	100 ↓ 4000	
	HGW-CB HGW-HB	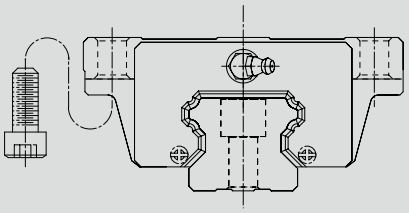	24 ↓ 90	100 ↓ 4000	
	HGW-CC HGW-HC	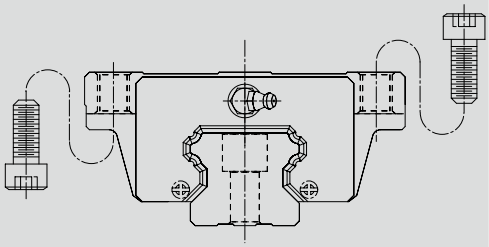	24 ↓ 90	100 ↓ 4000	

(2) Rail types

Besides the standard top mounting type, the bottom mounting type is also available.

Table 2-1-2 **Rail Types**

Mounting from Top	Mounting from bottom
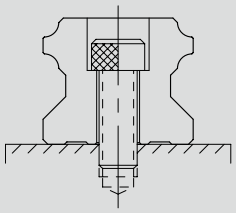	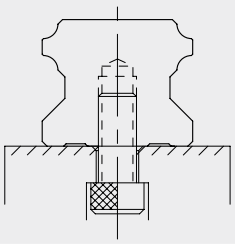

2-1-5 Accuracy Classes

The accuracy of HG series can be classified into normal (C), high (H), precision (P), super precision (SP), ultra precision (UP), five classes. Please choose the class by referring the accuracy of applied equipment.

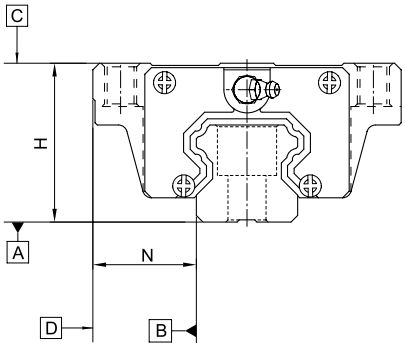

(1) Accuracy of non-interchangeable guideways

Table 2-1-3 **Accuracy Standards** Unit: mm

Item	HG - 15, 20				
Accuracy Classes	Normal (C)	High (H)	Precision (P)	Super Precision (SP)	Ultra Precision (UP)
Dimensional tolerance of height H	± 0.1	± 0.03	0 - 0.03	0 - 0.015	0 - 0.008
Dimensional tolerance of width N	± 0.1	± 0.03	0 - 0.03	0 - 0.015	0 - 0.008
Variation of height H	0.02	0.01	0.006	0.004	0.003
Variation of width N	0.02	0.01	0.006	0.004	0.003
Running parallelism of block surface C to surface A	See Table 2-1-11				
Running parallelism of block surface D to surface B	See Table 2-1-11				

Table 2-1-4 **Accuracy Standards** Unit: mm

Item	HG - 25, 30, 35				
Accuracy Classes	Normal (C)	High (H)	Precision (P)	Super Precision (SP)	Ultra Precision (UP)
Dimensional tolerance of height H	± 0.1	± 0.04	0 - 0.04	0 - 0.02	0 - 0.01
Dimensional tolerance of width N	± 0.1	± 0.04	0 - 0.04	0 - 0.02	0 - 0.01
Variation of height H	0.02	0.015	0.007	0.005	0.003
Variation of width N	0.03	0.015	0.007	0.005	0.003
Running parallelism of block surface C to surface A	See Table 2-1-11				
Running parallelism of block surface D to surface B	See Table 2-1-11				

HG Series

Heavy Load Ball Type

Table 2-1-5 **Accuracy Standards** Unit: mm

Item	HG - 45, 55				
Accuracy Classes	Normal (C)	High (H)	Precision (P)	Super Precision (SP)	Ultra Precision (UP)
Dimensional tolerance of height H	± 0.1	± 0.05	0 - 0.05	0 - 0.03	0 - 0.02
Dimensional tolerance of width N	± 0.1	± 0.05	0 - 0.05	0 - 0.03	0 - 0.02
Variation of height H	0.03	0.015	0.007	0.005	0.003
Variation of width N	0.03	0.02	0.01	0.007	0.005
Running parallelism of block surface C to surface A	See Table 2-1-11				
Running parallelism of block surface D to surface B	See Table 2-1-11				

Table 2-1-6 **Accuracy Standards** Unit: mm

Item	HG - 65				
Accuracy Classes	Normal (C)	High (H)	Precision (P)	Super Precision (SP)	Ultra Precision (UP)
Dimensional tolerance of height H	± 0.1	± 0.07	0 - 0.07	0 - 0.05	0 - 0.03
Dimensional tolerance of width N	± 0.1	± 0.07	0 - 0.07	0 - 0.05	0 - 0.03
Variation of height H	0.03	0.02	0.01	0.007	0.005
Variation of width N	0.03	0.025	0.015	0.01	0.007
Running parallelism of block surface C to surface A	See Table 2-1-11				
Running parallelism of block surface D to surface B	See Table 2-1-11				

(2) Accuracy of interchangeable guideways

Table 2-1-7 **Accuracy Standards** Unit: mm

Item	HG - 15, 20		
Accuracy Classes	Normal (C)	High (H)	Precision (P)
Dimensional tolerance of height H	± 0.1	± 0.03	± 0.015
Dimensional tolerance of width N	± 0.1	± 0.03	± 0.015
Variation of height H	0.02	0.01	0.006
Variation of width N	0.02	0.01	0.006
Running parallelism of block surface C to surface A	See Table 2-1-11		
Running parallelism of block surface D to surface B	See Table 2-1-11		

Table 2-1-8 **Accuracy Standards** Unit: mm

Item	HG - 25, 30, 35		
Accuracy Classes	Normal (C)	High (H)	Precision (P)
Dimensional tolerance of height H	± 0.1	± 0.04	± 0.02
Dimensional tolerance of width N	± 0.1	± 0.04	± 0.02
Variation of height H	0.02	0.015	0.007
Variation of width N	0.03	0.015	0.007
Running parallelism of block surface C to surface A	See Table 2-1-11		
Running parallelism of block surface D to surface B	See Table 2-1-11		

Table 2-1-9 **Accuracy Standards** Unit: mm

Item	HG - 45, 55		
Accuracy Classes	Normal (C)	High (H)	Precision (P)
Dimensional tolerance of height H	± 0.1	± 0.05	± 0.025
Dimensional tolerance of width N	± 0.1	± 0.05	± 0.025
Variation of height H	0.03	0.015	0.007
Variation of width N	0.03	0.02	0.01
Running parallelism of block surface C to surface A	See Table 2-1-11		
Running parallelism of block surface D to surface B	See Table 2-1-11		

Table 2-1-10 **Accuracy Standards** Unit: mm

Item	HG - 65		
Accuracy Classes	Normal (C)	High (H)	Precision (P)
Dimensional tolerance of height H	± 0.1	± 0.07	± 0.035
Dimensional tolerance of width N	± 0.1	± 0.07	± 0.035
Variation of height H	0.03	0.02	0.01
Variation of width N	0.03	0.025	0.015
Running parallelism of block surface C to surface A	See Table 2-1-11		
Running parallelism of block surface D to surface B	See Table 2-1-11		

(3) Accuracy of running parallelism

Table 2-1-11 **Accuracy of Running Parallelism**

Rail Length (mm)	Accuracy (μm)				
	C	H	P	SP	UP
~ 100	12	7	3	2	2
100 ~ 200	14	9	4	2	2
200 ~ 300	15	10	5	3	2
300 ~ 500	17	12	6	3	2
500 ~ 700	20	13	7	4	2
700 ~ 900	22	15	8	5	3
900 ~ 1,100	24	16	9	6	3
1,100 ~ 1,500	26	18	11	7	4
1,500 ~ 1,900	28	20	13	8	4
1,900 ~ 2,500	31	22	15	10	5
2,500 ~ 3,100	33	25	18	11	6
3,100 ~ 3,600	36	27	20	14	7
3,600 ~ 4,000	37	28	21	15	7

HG Series

Heavy Load Ball Type

2-1-6 Preload

(1) Definition

A preload can be applied to each guideway. Oversized balls are used. Generally, a linear motion guideway has a negative clearance between groove and balls in order to improve stiffness and maintain high precision. The figure shows the load is multiplied by the preload, the rigidity is doubled and the deflection is reduced by one half. The preload no larger than ZA would be recommended for the model size under HG20 to avoid an over-preload affecting the guideway's life.

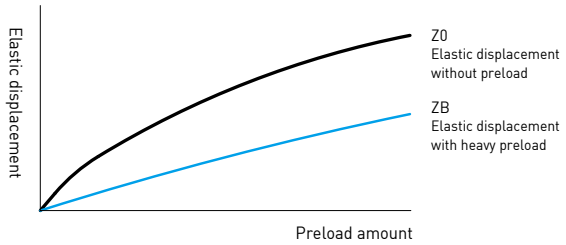

(2) Preload classes

HIWIN offers three classes of standard preload for various applications and conditions.

Table 2-1-12 **Preload Classes**

Class	Code	Preload	Condition	Examples of Application
Light Preload	Z0	0~ 0.02C	Certain load direction,low impact, low precision required	Transportation devices, auto-packing machines, X-Y axis for general industrial machines, welding machines, welders
Medium Preload	ZA	0.05C~0.07C	High precision required	Machining centers, Z axis for general industrial, machines, EDM, NC lathes, Precision X-Y tables, measuring equipment
Heavy Preload	ZB	0.10C~ 0.12C	High rigidity required, with vibration and impact	Machining centers, grinding machines, NC lathes, horizontal and vertical milling machines, Z axis of machine tools, Heavy cutting machines

Class	Interchangeable Guideway	Non-Interchangeable Guideway
Preload classes	Z0, ZA	Z0, ZA, ZB

Note: The "C" in the preload column denotes basic dynamic load rating.

(3) Stiffness performance

Stiffness depends on preload. The following table shows stiffness value of each size.

Table 2-1-13 **Radial stiffness for HG Series**

Load type	Series / Size	Stiffness (N/μm)		
		Z0	ZA	ZB
Heavy load	HG 15C	196	365	483
	HG 20C	232	460	678
	HG 25C	292	539	705
	HG 30C	354	618	823
	HG 35C	395	642	865
	HG 45C	505	738	980
	HG 55C	609	828	1092
	HG 65C	716	918	1201
Super heavy load	HG 20H	300	611	824
	HG 25H	378	715	935
	HG 30H	453	820	1093
	HG 35H	509	855	1150
	HG 45H	649	970	1298
	HG 55H	789	1085	1445
	HG 65H	946	1221	1599

2-1-7 Lubrication

(1) Grease

Grease nipple

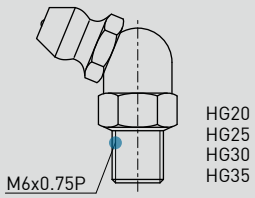

NO.34320001

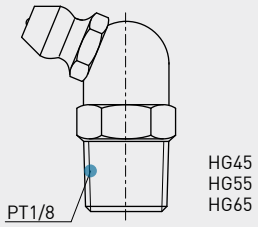

NO.34320003

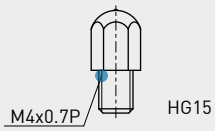

NO.34310002

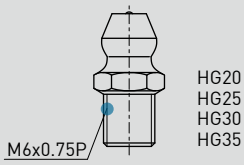

NO. 34310003(OPTION)

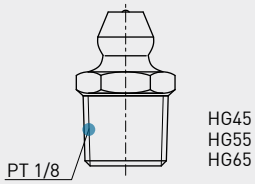

NO.3431000B(OPTION)

Mounting location

The standard location of the grease fitting is at either end of the block, but the nipple can be mounted at either side of the block instead. For side installation, contact HIWIN to pre-drill the block at the desired location.

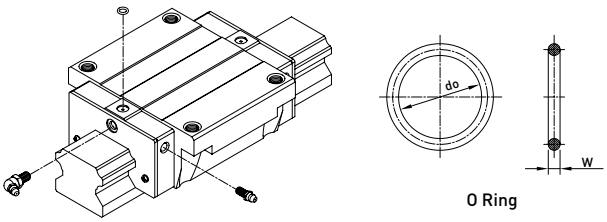

Table 2-1-14 **O-Ring size and max. permissible depth for piercing**

Size	O-Ring		Lube hole at top: max. permissible depth for piercing
	do (mm)	W (mm)	T_{max} (mm)
HG15	2.5±0.15	1.5±0.15	3.75
HG20	4.5±0.15	1.5±0.15	5.7
HG25	4.5±0.15	1.5±0.15	5.8
HG30	4.5±0.15	1.5±0.15	6.3
HG35	4.5±0.15	1.5±0.15	8.8
HG45	4.5±0.15	1.5±0.15	8.2
HG55	4.5±0.15	1.5±0.15	11.8
HG65	4.5±0.15	1.5±0.15	10.8

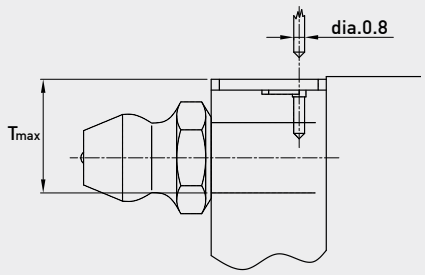

The lubricant amount for a block filled with grease

Table 2-1-15 **The lubricant Amount for a Block Filled with Grease**

Size	Heavy load (cm^3)	Super heavy load (cm^3)	Size	Heavy load (cm^3)	Super heavy load (cm^3)
HG15	1	-	HG35	10	12
HG20	2	3	HG45	17	21
HG25	5	6	HG55	26	33
HG30	7	8	HG65	50	61

Frequency of replenishment

Check the grease every 100 km, or every 3-6 months.

HG Series

Heavy Load Ball Type

(2) Oil

The recommended viscosity of oil is about 30~150cSt. If customers need to use oil-type lubrication, please inform us.

Types of oil piping joint

LF-64

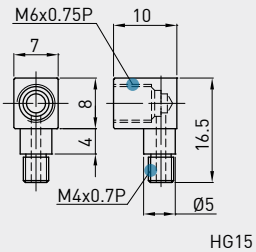

NO.97000EA1

LF-76

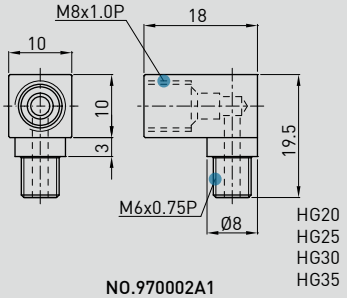

NO.970002A1

LF-78

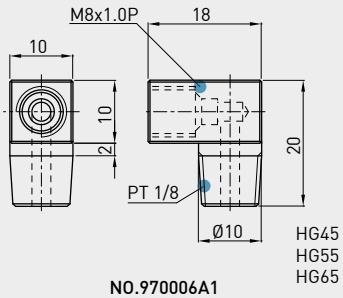

NO.970006A1

SF-64

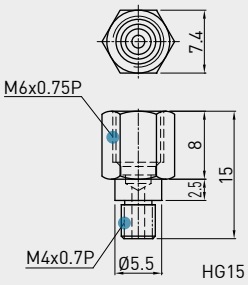

NO.97001TA1

LF-86

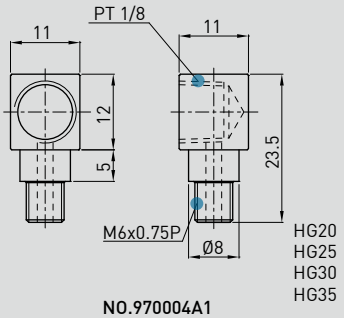

NO.970004A1

LF-88

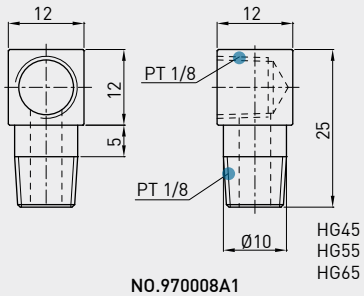

NO.970008A1

SF-76

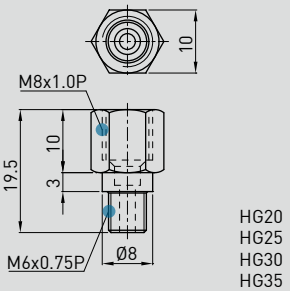

NO.970001A1

SF-78

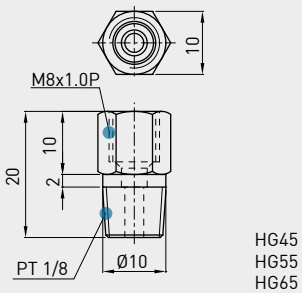

NO.970005A1

SF-86

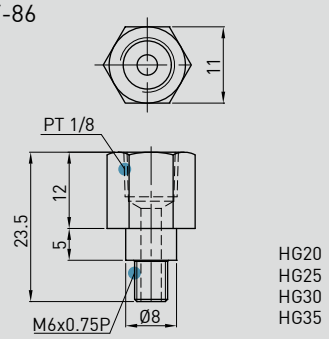

NO.970003A1

SF-88

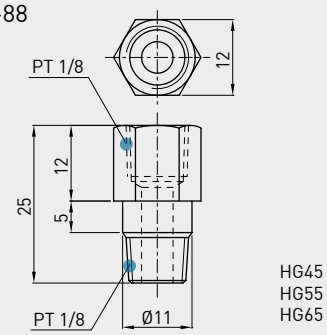

NO.970007A1

Oil refilling rate

Table 2-1-16

Size	Refilling rate (cm^3/hr)	Size	Refilling rate (cm^3/hr)
HG15	0.2	HG35	0.3
HG20	0.2	HG45	0.4
HG25	0.3	HG55	0.5
HG30	0.3	HG65	0.6

2-1-8 Dust Proof Accessories

(1) Codes of standard dust proof accessories

If the following accessories are needed, please add the code followed by the model number.

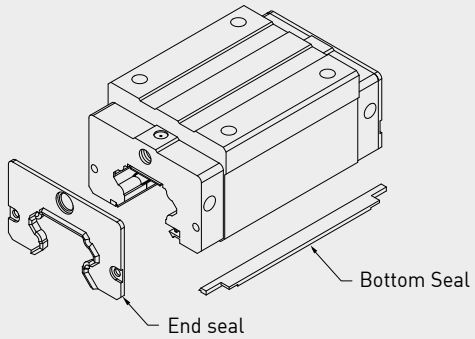

No symbol: Standard Protection (End seal + Bottom Seal)

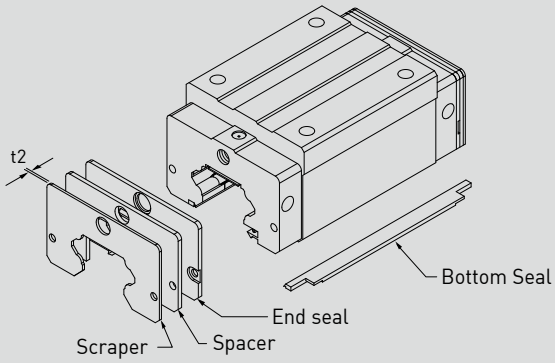

ZZ (End seal + Bottom Seal + Scraper)

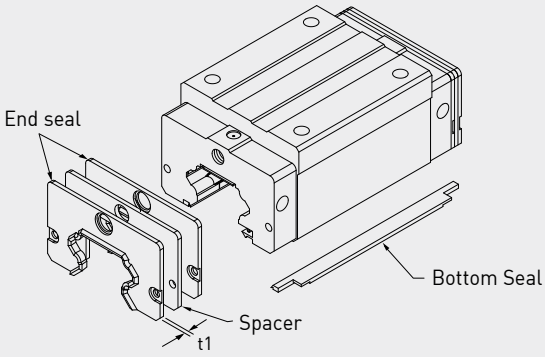

DD (Double seals + Bottom Seal)

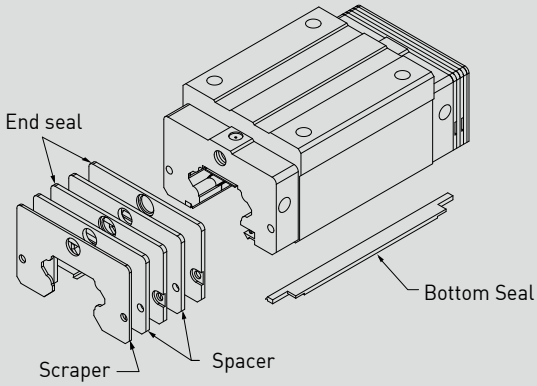

KK (Double seals + Bottom Seal + Scraper)

Note: HG20/25/65 are without spacer.

HG Series

Heavy Load Ball Type

(2) Codes of high-dust proof accessories

HIWIN develops many kinds of dust proof accessories for different application and working environment to avoid dust or debris. If the following accessories are needed, please add the code followed by the model number.

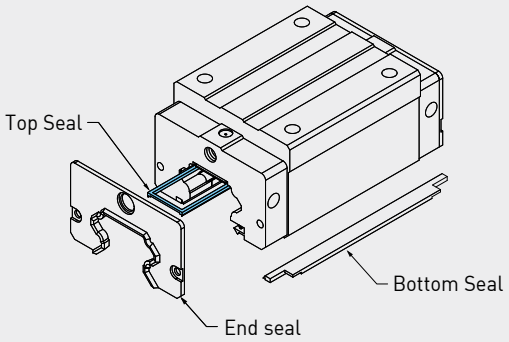

SH {End Seal (High-Dust Proof)
+ Bottom Seal (High Dust Proof) + Top Seal}

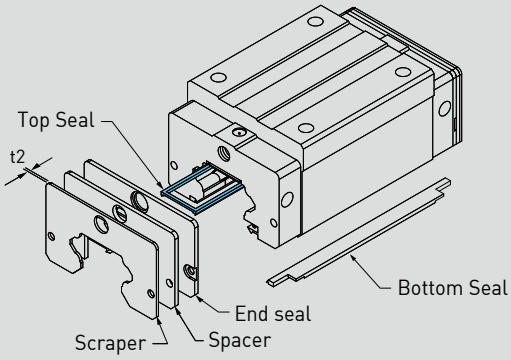

ZH {End Seal (High-Dust Proof)
+Bottom Seal (High Dust Proof) + Top Seal + Spacer}

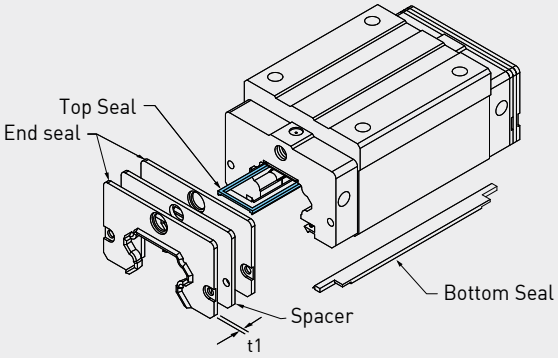

DH {Double End Seal (High Dust Proof)
+Bottom Seal (High Dust Proof) + Top Seal}

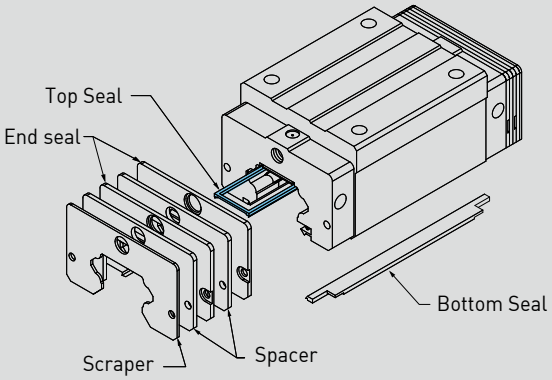

KH {Double End Seal (High Dust Proof)
+ Bottom Seal (High Dust Proof) +Top Seal +Scraper}

Note: 1. The available size for high dust proof accessories are HG20(C/H), 25(C/H), 30(C/H), 35(C/H) and 45C.
2. The value of fricton force will increase 0.6~1.2 kgf.
3. HG20/25 are without spacer.
4. If higher dust proof accessories is needed , please contact HIWIN.

(3) Codes of ultra-high dust proof accessories

Hiwin has developed high dust proof accessories which is used for environment that is full of dust and particle, such as wood working machinery and glass/stone machining equipment. These accessories show high performance of dust proof. If accessories are needed, please add the code followed by the model number.

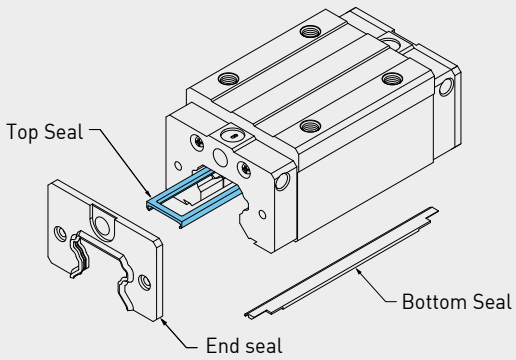

SW (End Seal(Ultra-high dustproof) +Bottom Seal(Ultra-high dustproof) +Top Seal)

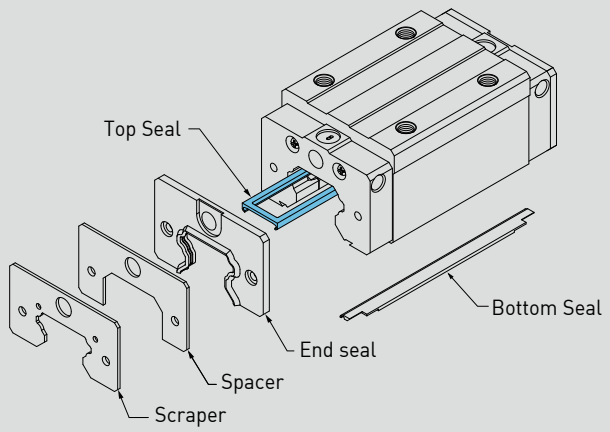

ZW (End Seal(Ultra-high dustproof) +Bottom Seal(Ultra-high dustproof) +Top Seal+Scraper)

Note : 1. The available size for high dust proof accessories are HG15C, HG20(C/H), HG25(C/H), HG30(C/H), HG35(C/H), HG45(C/H).
2. The value of fricton force will increase 1.5~4.0 kgf.
3. MGN5 is only supplied with End Seal (Ultra-high dustproof)

(4) Fuction of dust proof accessories

End seal and bottom seal

To prevent life reduction caused by iron chips or dust entering the block.

Double seals

Enhances the wiping effect, foreign matter can be completely wiped off.

Table 2-1-17 **Dimensions of end seal**

Size	Thickness (t1) (mm)	Size	Thickness (t1) (mm)
HG15 ES	3	HG35 ES	3.2
HG20 ES	3.5	HG45 ES	4.5
HG25 ES	3.5	HG55 ES	4.5
HG30 ES	3.2	HG65 ES	6

Scraper

The scraper removes high-temperature iron chips and larger foreign objects.

Table 2-1-18 **Dimensions of scraper**

Size	Thickness (t2) (mm)	Size	Thickness (t2) (mm)
HG15 SC	1.5	HG35 SC	1.5
HG20 SC	1.5	HG45 SC	1.5
HG25 SC	1.5	HG55 SC	1.5
HG30 SC	1.5	HG65 SC	1.5

Top Seal

Top seal can efficiently avoid dust from the surface of rail or tapping hole getting inside the block.

HG Series

Heavy Load Ball Type

Bolt caps for rail mounting holes

Caps are used to cover the mounting holes to prevent chips or other foreign objects from collecting in the holes. The caps will be enclosed in each rail package.

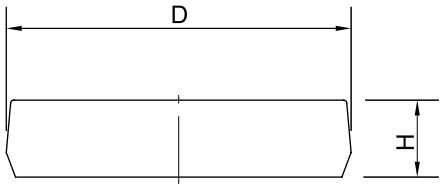

Table 2-1-19 **Dimensions of Bolt Caps for Rail Mounting Holes**

Rail size	Bolt size	Diameter(D) (mm)	Thickness(H) (mm)	Rail size	Bolt size	Diameter(D) (mm)	Thickness(H) (mm)
HGR15	M4	7.65	1.1	HGR35	M8	14.20	3.5
HGR20	M5	9.65	2.5	HGR45	M12	20.25	4.5
HGR25	M6	11.15	2.5	HGR55	M14	23.25	5.0
HGR30	M8	14.20	3.5	HGR65	M16	26.35	5.0

(5) Dimensions of block equipped with the parts

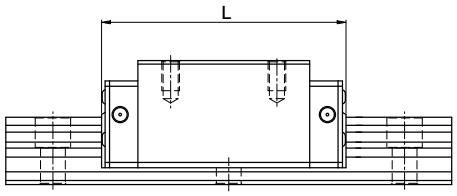

Table 2-1-20 **Overall block length**

unit: mm

Size	Overall block length (L)					
	SS/SH	ZZ/ZH	DD/DH	KK/KH	SW	ZW
HG15C	61.4 (61.8)	69.0 (69.0)	68.0 (68.4)	75.6 (75.6)	63.2 (63.2)	71.0 (71.0)
*HG20C	77.5 (79.3)	82.5 (84.5)	82.5 (84.3)	87.5 (89.5)	78.5 (78.5)	86.3 (87.7)
*HG20H	92.2 (94.0)	97.2 (99.2)	97.5 (99.0)	102.2 (104.2)	93.2 (93.2)	101.0 (102.4)
*HG25C	84.0 (85.0)	89.0 (91.0)	89.0 (90.0)	94.0 (96.0)	85.0 (85.0)	92.8 (94.8)
*HG25H	104.6 (105.6)	109.6 (111.6)	109.6 (110.6)	114.6 (116.6)	105.6 (105.6)	113.4 (115.4)
*HG30C	97.4 (99.4)	105.4 (107.4)	104.8 (106.8)	112.8 (114.8)	99.0 (100.4)	107.2 (109.2)
*HG30H	120.4 (122.4)	128.4 (130.4)	127.8 (129.8)	135.8 (137.8)	122.0 (123.4)	130.2 (132.2)
*HG35C	112.4 (114.4)	120.4 (122.4)	119.8 (121.8)	127.8 (129.8)	115.2 (116.0)	123.4 (125.4)
*HG35H	138.2 (140.2)	146.2 (148.2)	145.6 (147.6)	153.6 (155.6)	141.0 (141.8)	149.2 (151.2)
*HG45C	139.4 (139.4)	150.0 (150.0)	149.4 (149.4)	160.0 (160.0)	140.0 (140.0)	148.8 (150.2)
HG45H	171.2 (171.2)	181.8 (181.8)	181.2 (181.2)	191.8 (191.8)	171.8 (171.8)	180.6 (182.0)
HG55C	166.7 (166.7)	177.1 (177.1)	177.1 (177.1)	187.5 (187.5)	-	-
HG55H	204.8 (204.8)	215.2 (215.2)	215.2 (215.2)	225.6 (225.6)	-	-
HG65C	200.2 (200.2)	208.2 (208.2)	209.2 (209.2)	217.2 (217.2)	-	-
HG65H	259.6 (259.6)	267.6 (267.6)	268.6 (268.6)	276.6 (276.6)	-	-

Note : 1. For the marking of "*", it means this specification is available for SH/ZH/DH/KH dust proof accessories.
2. The marking of "( )" denotes the maximum block length with screws, lips of end seals, etc.

2-1-9 Friction

The maximum value of resistance per end seal are as shown in the table.

Table 2-1-21 **Seal Resistance**

Size	Resistance N (kgf)	Size	Resistance N (kgf)
HG15	2.35 (0.24)	HG35	4.91 (0.5)
HG20	2.75 (0.28)	HG45	3.83 (0.39)
HG25	3.14 (0.32)	HG55	4.61 (0.47)
HG30	3.53 (0.36)	HG65	5.79 (0.59)

Note: 1. 1kgf=9.81N
2. Please inform HIWIN if low friction request is required.

2-1-10 The Accuracy Tolerance of Mounting Surface

(1) The accuracy tolerance of rail-mounting surface

Because of the circular-arc contact design, the HG linear guideway can compensate for some surface-error on installation and still maintain smooth linear motion.
As long as the accuracy requirements for the mounting surface are followed, high accuracy and rigidity of linear motion of the guideway can be obtained without any difficulty. For fast installation and smooth movement ability of the deviation in mounting surface accuracy.

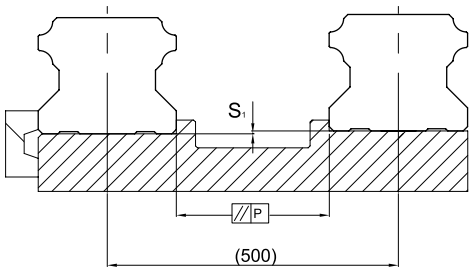

(2) The parallelism tolerance of reference surface (P)

Table 2-1-22 **Max. Parallelism Tolerance (P)** unit: μm

Size	Preload classes		
	Z0	ZA	ZB
HG15	25	18	13
HG20	25	20	18
HG25	30	22	20
HG30	40	30	27
HG35	50	35	30
HG45	60	40	35
HG55	70	50	45
HG65	80	60	55

(3) The accuracy tolerance of reference surface height

Table 2-1-23 **Max. Tolerance of Reference Surface Height (S_1)** unit: μm

Size	Preload classes		
	Z0	ZA	ZB
HG15	130	85	35
HG20	130	85	50
HG25	130	85	70
HG30	170	110	90
HG35	210	150	120
HG45	250	170	140
HG55	300	210	170
HG65	350	250	200

Note : Permissible value is proportional to the axial distance

HG Series

Heavy Load Ball Type

2-1-11 Cautions for Installation

(1) Shoulder heights and fillets

Improper shoulder heights and fillets of mounting surfaces will cause a deviation in accuracy and the interference with the rail or block. As long as the recommended shoulder heights and fillets are followed, installation inaccuracies should be eliminated.

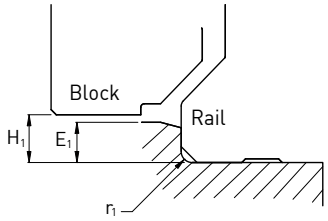

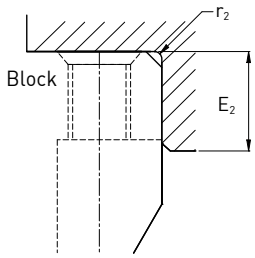

Table 2-1-24 **Shoulder Heights and Fillets**

Size	Max. radius of fillets r_1 (mm)	Max. radius of fillets r_2 (mm)	Shoulder height beside the rail E_1 (mm)	Shoulder height beside the block E_2 (mm)	Clearance under block H_1 (mm)
HG15	0.5	0.5	3	4	4.3
HG20	0.5	0.5	3.5	5	4.6
HG25	1.0	1	5	5	5.5
HG30	1.0	1	5	5	6
HG35	1.0	1	6	6	7.5
HG45	1.0	1	8	8	9.5
HG55	1.5	1.5	10	10	13
HG65	1.5	1.5	10	10	15

(2) Tightening Torque of Bolts for Installation

Improper tightening of bolts will seriously influence the accuracy of Linear Guideway installation. The following tightening torques for different sizes of bolts are recommended.

Table 2-1-25 **Mounting Torque**

Size	Bolt size	Torque N-cm (kgf-cm)		
		Iron	Casting	Aluminum
HG15	M4×0.7P×16L	392 (40)	274 (28)	206 (21)
HG20	M5×0.8P×16L	883 (90)	588 (60)	441 (45)
HG25	M6×1P×20L	1373 (140)	921 (94)	686 (70)
HG30	M8×1.25P×25L	3041 (310)	2010 (205)	1470 (150)
HG35	M8×1.25P×25L	3041 (310)	2010 (205)	1470 (150)
HG45	M12×1.75P×35L	11772 (1200)	7840 (800)	5880 (600)
HG55	M14×2P×45L	15696 (1600)	10500 (1100)	7840 (800)
HG65	M16×2P×50L	19620 (2000)	13100 (1350)	9800 (1000)

Note:1 kgf=9.81 N

2-1-12 Standard and Maximum Lengths of Rail

HIWIN offers standard rail lengths for customer needs. For non-standard E-values, the recommended dimension should no greater than 1/2 of the pitch (P) dimension. This will prevent an unstable rail end.

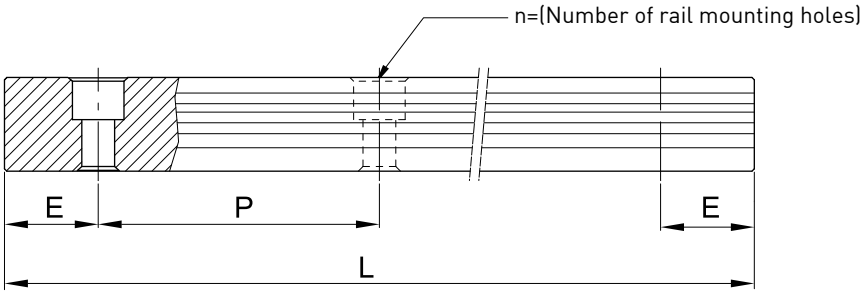

$$L = (n-1) \times P + 2 \times E \quad \text{Eq.2.1}$$

L : Total length of rail (mm)
n : Number of mounting holes
P : Distance between any two holes (mm)
E : Distance from the center of the last hole to the edge (mm)

Table 2-1-26 **Rail Standard Length and Max. Length**

unit: mm

Item	HG15	HG20	HG25	HG30	HG35	HG45	HG55	HG65
Standard Length L(n)	160 (3)	220 (4)	220 (4)	280 (4)	280 (4)	570 (6)	780 (7)	1,270 (9)
	220 (4)	280 (5)	280 (5)	440 (6)	440 (6)	885 (9)	1,020 (9)	1,570 (11)
	280 (5)	340 (6)	340 (6)	600 (8)	600 (8)	1,200 (12)	1,260 (11)	2,020 (14)
	340 (6)	460 (8)	460 (8)	760 (10)	760 (10)	1,620 (16)	1,500 (13)	2,620 (18)
	460 (8)	640 (11)	640 (11)	1,000 (13)	1,000 (13)	2,040 (20)	1,980 (17)	
	640 (11)	820 (14)	820 (14)	1,640 (21)	1,640 (21)	2,460 (24)	2,580 (22)	
	820 (14)	1,000 (17)	1,000 (17)	2,040 (26)	2,040 (26)	2,985 (29)	2,940 (25)	
		1,240 (21)	1,240 (21)	2,520 (32)	2,520 (32)			
			1,600 (27)	3,000 (38)	3,000 (38)			
Pitch (P)	60	60	60	80	80	105	120	150
Distance to End (E_s)	20	20	20	20	20	22.5	30	35
Max. Standard Length	4,000(67)	4,000 (67)	4,000 (67)	3,960 (50)	3,960 (50)	3,930 (38)	3,900 (33)	3,970 (27)
Max. Length	4,000	4,000	4,000	4,000	4,000	4,000	4,000	4,000

Note : 1. Tolerance of E value for standard rail is 0.5~-0.5 mm. Tolerance of E value for jointed rail is 0~-0.3 mm.
2. Maximum standard length means the max. rail length with standard E value on both sides.
3. If different E value is needed, please contact HIWIN.
4. HGR15/HGR20/HGR25 of stainless steel is supplied with the maximum length of 2000mm.

HG Series

Heavy Load Ball Type

2-1-13 Dimensions for HIWIN HG Series

(1) HGH-CA / HGH-HA

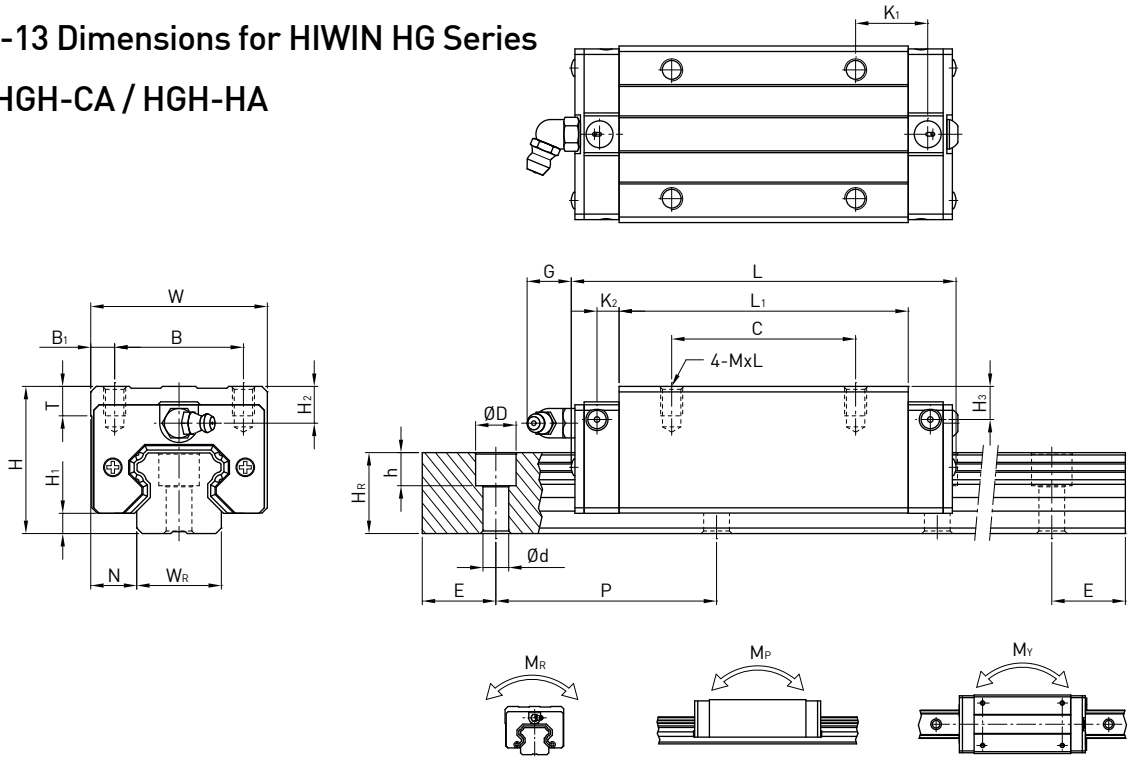

Model No.	Dimensions of Assembly (mm)			Dimensions of Block (mm)													Dimensions of Rail (mm)							Mounting Bolt for Rail	Basic Dynamic Load Rating	Basic Static Load Rating	Static Rated Moment			Weight	
	H	H_1	N	W	B	B_1	C	L_1	L	K_1	K_2	G	Mxl	T	H_2	H_3	W_R	H_R	D	h	d	P	E	(mm)	C(kN)	C_0 (kN)	M_R kN-m	M_P kN-m	M_Y kN-m	Block kg	Rail kg/m
HGH15CA	28	4.3	9.5	34	26	4	26	39.4	61.4	10	4.85	5.3	M4x5	6	7.95	7.7	15	15	7.5	5.3	4.5	60	20	M4x16	14.7	23.47	0.12	0.10	0.10	0.18	1.45
HGH20CA	30	4.6	12	44	32	6	36	50.5	77.5	12.25	6	12	M5x6	8	6	6	20	17.5	9.5	8.5	6	60	20	M5x16	27.1	36.68	0.27	0.20	0.20	0.30	2.21
HGH20HA							50	65.2	92.2	12.6															32.7	47.96	0.35	0.35	0.35	0.39	
HGH25CA	40	5.5	12.5	48	35	6.5	35	58	84	15.7	6	12	M6x8	8	10	9	23	22	11	9	7	60	20	M6x20	34.9	52.82	0.42	0.33	0.33	0.51	3.21
HGH25HA							50	78.6	104.6	18.5															42.2	69.07	0.56	0.57	0.57	0.69	
HGH30CA	45	6	16	60	40	10	40	70	97.4	20.25	6	12	M8x10	8.5	9.5	13.8	28	26	14	12	9	80	20	M8x25	48.5	71.87	0.66	0.53	0.53	0.88	4.47
HGH30HA							60	93	120.4	21.75															58.6	93.99	0.88	0.92	0.92	1.16	
HGH35CA	55	7.5	18	70	50	10	50	80	112.4	20.6	7	12	M8x12	10.2	16	19.6	34	29	14	12	9	80	20	M8x25	64.6	93.88	1.16	0.81	0.81	1.45	6.30
HGH35HA							72	105.8	138.2	22.5															77.9	122.77	1.54	1.40	1.40	1.92	
HGH45CA	70	9.5	20.5	86	60	13	60	97	139.4	23	10	12.9	M10x17	16	18.5	30.5	45	38	20	17	14	105	22.5	M12x35	103.8	146.71	1.98	1.55	1.55	2.73	10.41
HGH45HA							80	128.8	171.2	28.9															125.3	191.85	2.63	2.68	2.68	3.61	
HGH55CA	80	13	23.5	100	75	12.5	75	117.7	166.7	27.35	11	12.9	M12x18	17.5	22	29	53	44	23	20	16	120	30	M14x45	153.2	211.23	3.69	2.64	2.64	4.17	15.08
HGH55HA							95	155.8	204.8	36.4															184.9	276.23	4.88	4.57	4.57	5.49	
HGH65CA	90	15	31.5	126	76	25	70	144.2	200.2	43.1	14	12.9	M16x20	25	15	15	63	53	26	22	18	150	35	M16x50	213.2	287.48	6.65	4.27	4.27	7.00	21.18
HGH65HA							120	203.6	259.6	47.8															277.8	420.17	9.38	7.38	7.38	9.82	

Note : 1 kgf = 9.81 N

(2) HGL-CA / HGL-HA

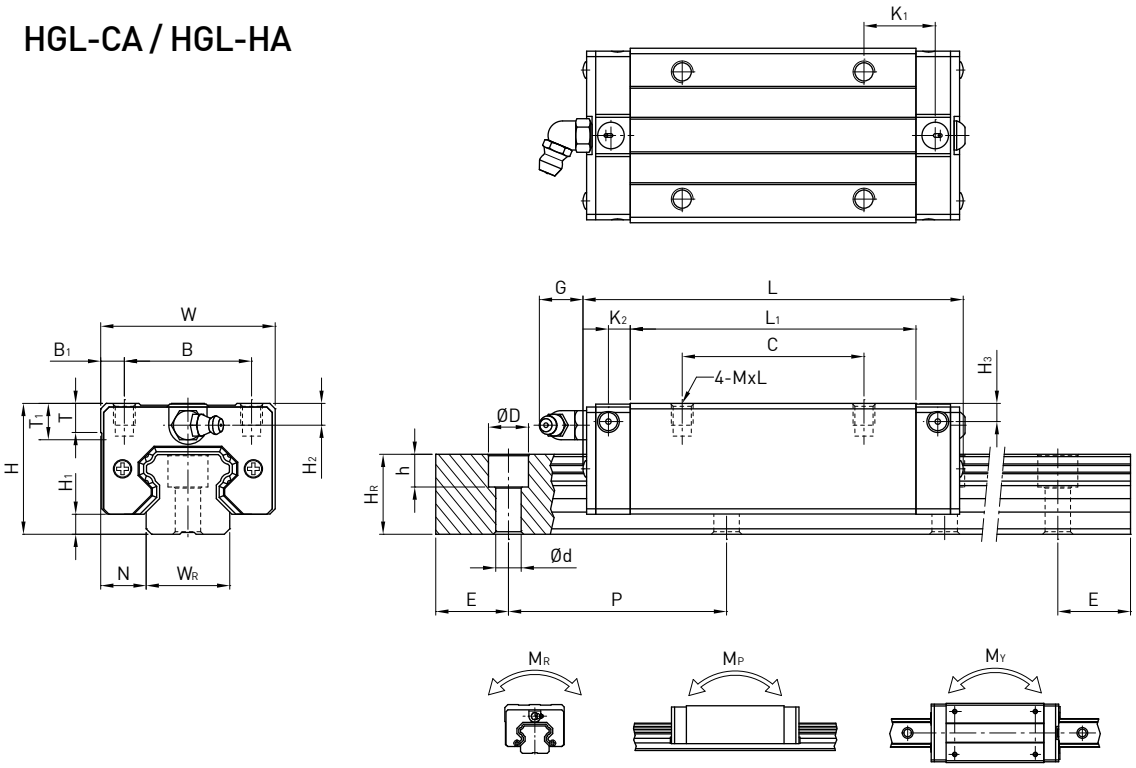

Model No.	Dimensions of Assembly (mm)			Dimensions of Block (mm)													Dimensions of Rail (mm)							Mounting Bolt for Rail	Basic Dynamic Load Rating	Basic Static Load Rating	Static Rated Moment			Weight	
	H	H_1	N	W	B	B_1	C	L_1	L	K_1	K_2	G	Mxl	T	H_2	H_3	W_R	H_R	D	h	d	P	E	(mm)	C(kN)	C_0 (kN)	M_R kN-m	M_P kN-m	M_Y kN-m	Block kg	Rail kg/m
HGL15CA	24	4.3	9.5	34	26	4	26	39.4	61.4	10	4.85	5.3	M4x4	6	3.95	3.7	15	15	7.5	5.3	4.5	60	20	M4x16	14.7	23.47	0.12	0.10	0.10	0.14	1.45
HGL25CA	36	5.5	12.5	48	35	6.5	35	58	84	15.7	6	12	M6x6	8	6	5	23	22	11	9	7	60	20	M6x20	34.9	52.82	0.42	0.33	0.33	0.42	3.21
HGL25HA							50	78.6	104.6	18.5															42.2	69.07	0.56	0.57	0.57	0.57	
HGL30CA	42	6	16	60	40	10	40	70	97.4	20.25	6	12	M8x10	8.5	6.5	10.8	28	26	14	12	9	80	20	M8x25	48.5	71.87	0.66	0.53	0.53	0.78	4.47
HGL30HA							60	93	120.4	21.75															58.6	93.99	0.88	0.92	0.92	1.03	
HGL35CA	48	7.5	18	70	50	10	50	80	112.4	20.6	7	12	M8x12	10.2	9	12.6	34	29	14	12	9	80	20	M8x25	64.6	93.88	1.16	0.81	0.81	1.14	6.30
HGL35HA							72	105.8	138.2	22.5															77.9	122.77	1.54	1.40	1.40	1.52	
HGL45CA	60	9.5	20.5	86	60	13	60	97	139.4	23	10	12.9	M10x17	16	8.5	20.5	45	38	20	17	14	105	22.5	M12x35	103.8	146.71	1.98	1.55	1.55	2.08	10.41
HGL45HA							80	128.8	171.2	28.9															125.3	191.85	2.63	2.68	2.68	2.75	
HGL55CA	70	13	23.5	100	75	12.5	75	117.7	166.7	27.35	11	12.9	M12x18	17.5	12	19	53	44	23	20	16	120	30	M14x45	153.2	211.23	3.69	2.64	2.64	3.25	15.08
HGL55HA							95	155.8	204.8	36.4															184.9	276.23	4.88	4.57	4.57	4.27	

Note : 1 kgf = 9.81 N

HG Series

Heavy Load Ball Type

(3) HGW-CA / HGW-HA

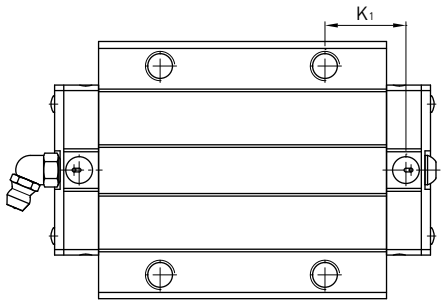

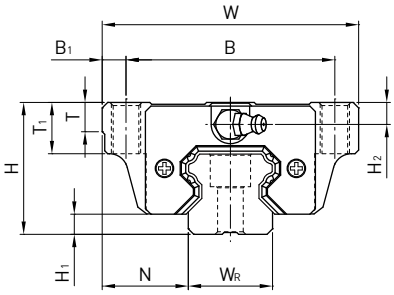

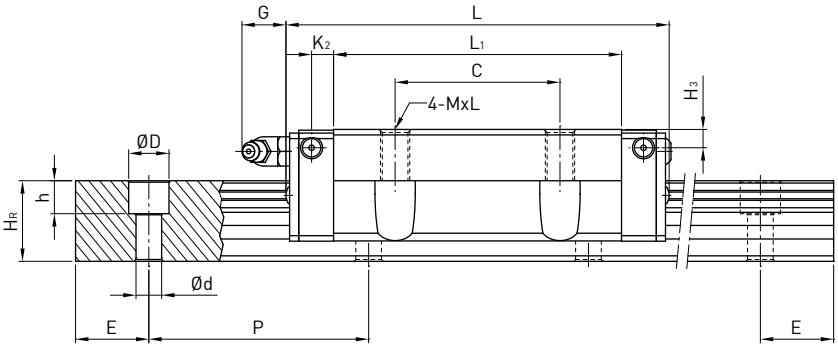

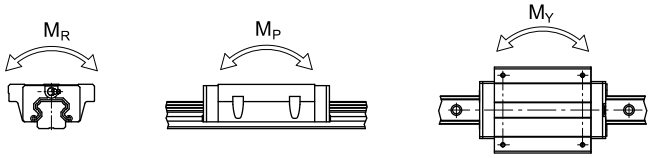

Model No.	Dimensions of Assembly (mm)			Dimensions of Block (mm)														Dimensions of Rail (mm)							Mounting Bolt for Rail	Basic Dynamic Load Rating	Basic Static Load Rating	Static Rated Moment			Weight	
	H	H_1	N	W	B	B_1	C	L_1	L	K_1	K_2	G	M	T	T_1	H_2	H_3	W_R	H_R	D	h	d	P	E	(mm)	C(kN)	C_0(kN)	M_R kN-m	M_P kN-m	M_Y kN-m	Block kg	Rail kg/m
HGW15CA	24	4.3	16	47	38	4.5	30	39.4	61.4	8	4.85	5.3	M5	6	8.9	3.95	3.7	15	15	7.5	5.3	4.5	60	20	M4x16	14.7	23.47	0.12	0.10	0.10	0.17	1.45
HGW20CA	30	4.6	21.5	63	53	5	40	50.5	77.5	10.25	6	12	M6	8	10	6	6	20	17.5	9.5	8.5	6	60	20	M5x16	27.1	36.68	0.27	0.20	0.20	0.40	2.21
HGW20HA								65.2	92.2	17.6																32.7	47.96	0.35	0.35	0.35	0.52	
HGW25CA	36	5.5	23.5	70	57	6.5	45	58	84	10.7	6	12	M8	8	14	6	5	23	22	11	9	7	60	20	M6x20	34.9	52.82	0.42	0.33	0.33	0.59	3.21
HGW25HA								78.6	104.6	21																42.2	69.07	0.56	0.57	0.57	0.80	
HGW30CA	42	6	31	90	72	9	52	70	97.4	14.25	6	12	M10	8.5	16	6.5	10.8	28	26	14	12	9	80	20	M8x25	48.5	71.87	0.66	0.53	0.53	1.09	4.47
HGW30HA								93	120.4	25.75																58.6	93.99	0.88	0.92	0.92	1.44	
HGW35CA	48	7.5	33	100	82	9	62	80	112.4	14.6	7	12	M10	10.1	18	9	12.6	34	29	14	12	9	80	20	M8x25	64.6	93.88	1.16	0.81	0.81	1.56	6.30
HGW35HA								105.8	138.2	27.5																77.9	122.77	1.54	1.40	1.40	2.06	
HGW45CA	60	9.5	37.5	120	100	10	80	97	139.4	13	10	12.9	M12	15.1	22	8.5	20.5	45	38	20	17	14	105	22.5	M12x35	103.8	146.71	1.98	1.55	1.55	2.79	10.41
HGW45HA								128.8	171.2	28.9																125.3	191.85	2.63	2.68	2.68	3.69	
HGW55CA	70	13	43.5	140	116	12	95	117.7	166.7	17.35	11	12.9	M14	17.5	26.5	12	19	53	44	23	20	16	120	30	M14x45	153.2	211.23	3.69	2.64	2.64	4.52	15.08
HGW55HA								155.8	204.8	36.4																184.9	276.23	4.88	4.57	4.57	5.96	
HGW65CA	90	15	53.5	170	142	14	110	144.2	200.2	23.1	14	12.9	M16	25	37.5	15	15	63	53	26	22	18	150	35	M16x50	213.2	287.48	6.65	4.27	4.27	9.17	21.18
HGW65HA								203.6	259.6	52.8																277.8	420.17	9.38	7.38	7.38	12.89	

Note : 1 kgf = 9.81 N

(4) HGW-CB / HGW-HB

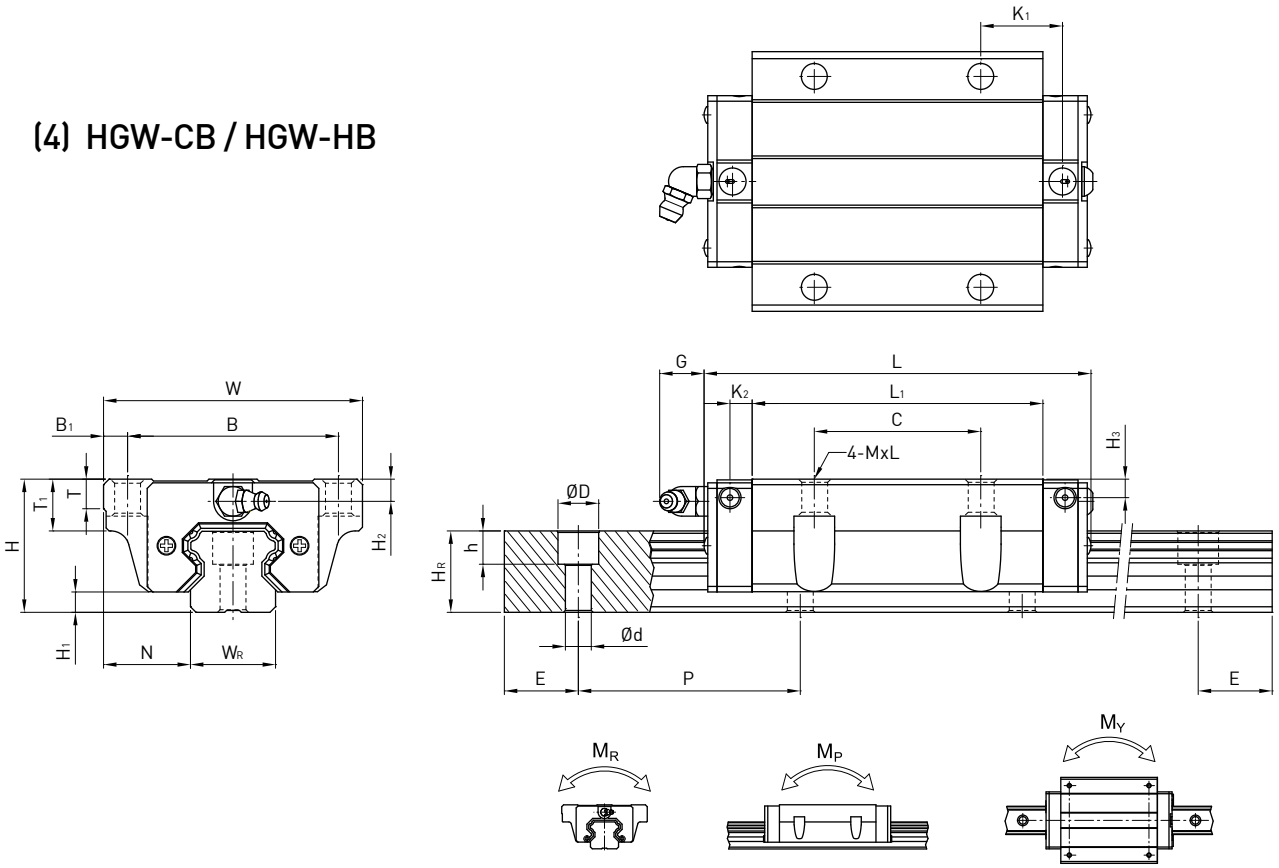

Model No.	Dimensions of Assembly (mm)			Dimensions of Block (mm)															Dimensions of Rail (mm)							Mounting Bolt for Rail	Basic Dynamic Load Rating	Basic Static Load Rating	Static Rated Moment			Weight	
	H	H_1	N	W	B	B_1	C	L_1	L	K_1	K_2	G	M	T	T_1	T_2	H_2	H_3	W_R	H_R	D	h	d	P	E	(mm)	C(kN)	C_0 (kN)	M_R kN-m	M_P kN-m	M_Y kN-m	Block kg	Rail kg/m
HGW15CB	24	4.3	16	47	38	4.5	30	39.4	61.4	8	4.85	5.3	Ø4.5	6	8.9	6.95	3.95	3.7	15	15	7.5	5.3	4.5	60	20	M4x16	14.7	23.47	0.12	0.10	0.10	0.17	1.45
HGW20CB	30	4.6	21.5	63	53	5	40	50.5	77.5	10.25	6	12	Ø6	8	10	9.5	6	6	20	17.5	9.5	8.5	6	60	20	M5x16	27.1	36.68	0.27	0.20	0.20	0.40	2.21
HGW20HB								65.2	92.2	17.6																	32.7	47.96	0.35	0.35	0.35	0.52	
HGW25CB	36	5.5	23.5	70	57	6.5	45	58	84	10.7	6	12	Ø7	8	14	10	6	5	23	22	11	9	7	60	20	M6x20	34.9	52.82	0.42	0.33	0.33	0.59	3.21
HGW25HB								78.6	104.6	21																	42.2	69.07	0.56	0.57	0.57	0.80	
HGW30CB	42	6	31	90	72	9	52	70	97.4	14.25	6	12	Ø9	8.5	16	10	6.5	10.8	28	26	14	12	9	80	20	M8x25	48.5	71.87	0.66	0.53	0.53	1.09	4.47
HGW30HB								93	120.4	25.75																	58.6	93.99	0.88	0.92	0.92	1.44	
HGW35CB	48	7.5	33	100	82	9	62	80	112.4	14.6	7	12	Ø9	10.1	18	13	9	12.6	34	29	14	12	9	80	20	M8x25	64.6	93.88	1.16	0.81	0.81	1.56	6.30
HGW35HB								105.8	138.2	27.5																	77.9	122.77	1.54	1.40	1.40	2.06	
HGW45CB	60	9.5	37.5	120	100	10	80	97	139.4	13	10	12.9	Ø11	15.1	22	15	8.5	20.5	45	38	20	17	14	105	22.5	M12x35	103.8	146.71	1.98	1.55	1.55	2.79	10.41
HGW45HB								128.8	171.2	28.9																	125.3	191.85	2.63	2.68	2.68	3.69	
HGW55CB	70	13	43.5	140	116	12	95	117.7	166.7	17.35	11	12.9	Ø14	17.5	26.5	17	12	19	53	44	23	20	16	120	30	M14x45	153.2	211.23	3.69	2.64	2.64	4.52	15.08
HGW55HB								155.8	204.8	36.4																	184.9	276.23	4.88	4.57	4.57	5.96	
HGW65CB	90	15	53.5	170	142	14	110	144.2	200.2	23.1	14	12.9	Ø16	25	37.5	23	15	15	63	53	26	22	18	150	35	M16x50	213.2	287.48	6.65	4.27	4.27	9.17	21.18
HGW65HB								203.6	259.6	52.8																	277.8	420.17	9.38	7.38	7.38	12.89	

Note : 1 kgf = 9.81 N

HG Series

Heavy Load Ball Type

(5) HGW-CC / HGW-HC

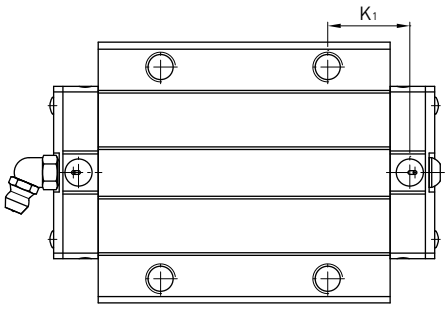

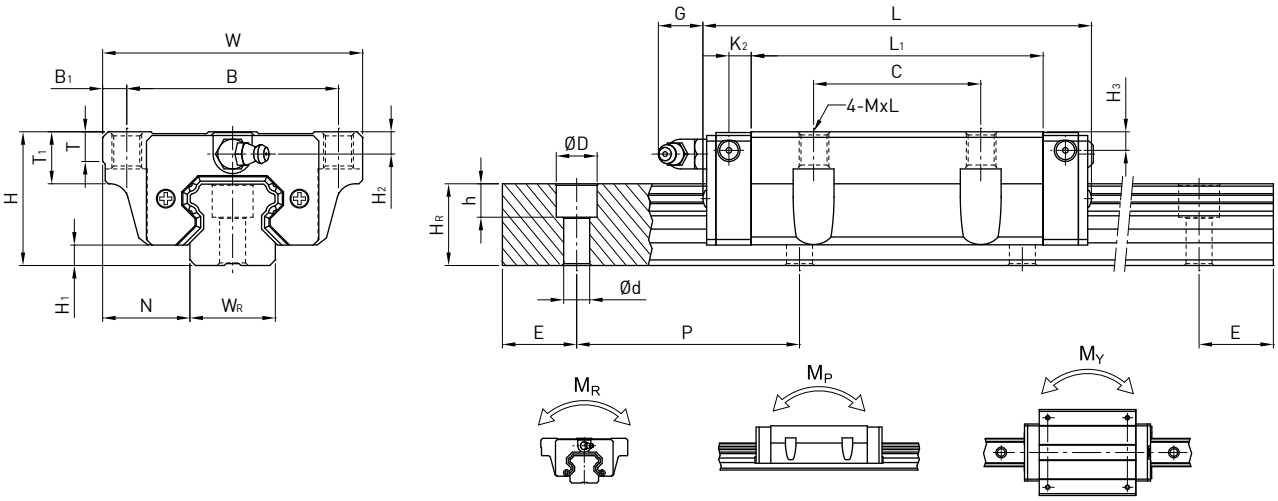

Model No.	Dimensions of Assembly (mm)			Dimensions of Block (mm)															Dimensions of Rail (mm)							Mounting Bolt for Rail	Basic Dynamic Load Rating	Basic Static Load Rating	Static Rated Moment			Weight	
	H	H_1	N	W	B	B_1	C	L_1	L	K_1	K_2	G	M	T	T_1	T_2	H_2	H_3	W_R	H_R	D	h	d	P	E	(mm)	C(kN)	C_0 (kN)	M_R kN-m	M_P kN-m	M_Y kN-m	Block kg	Rail kg/m
HGW15CC	24	4.3	16	47	38	4.5	30	39.4	61.4	8	4.85	5.3	M5	6	8.9	6.95	3.95	3.7	15	15	7.5	5.3	4.5	60	20	M4x16	14.7	23.47	0.12	0.10	0.10	0.17	1.45
HGW20CC	30	4.6	21.5	63	53	5	40	50.5	77.5	10.25	6	12	M6	8	10	9.5	6	6	20	17.5	9.5	8.5	6	60	20	M5x16	27.1	36.68	0.27	0.20	0.20	0.40	2.21
HGW20HC								65.2	92.2	17.6																	32.7	47.96	0.35	0.35	0.35	0.52	
HGW25CC	36	5.5	23.5	70	57	6.5	45	58	84	10.7	6	12	M8	8	14	10	6	5	23	22	11	9	7	60	20	M6x20	34.9	52.82	0.42	0.33	0.33	0.59	3.21
HGW25HC								78.6	104.6	21																	42.2	69.07	0.56	0.57	0.57	0.80	
HGW30CC	42	6	31	90	72	9	52	70	97.4	14.25	6	12	M10	8.5	16	10	6.5	10.8	28	26	14	12	9	80	20	M8x25	48.5	71.87	0.66	0.53	0.53	1.09	4.47
HGW30HC								93	120.4	25.75																	58.6	93.99	0.88	0.92	0.92	1.44	
HGW35CC	48	7.5	33	100	82	9	62	80	112.4	14.6	7	12	M10	10.1	18	13	9	12.6	34	29	14	12	9	80	20	M8x25	64.6	93.88	1.16	0.81	0.81	1.56	6.30
HGW35HC								105.8	138.2	27.5																	77.9	122.77	1.54	1.40	1.40	2.06	
HGW45CC	60	9.5	37.5	120	100	10	80	97	139.4	13	10	12.9	M12	15.1	22	15	8.5	20.5	45	38	20	17	14	105	22.5	M12x35	103.8	146.71	1.98	1.55	1.55	2.79	10.41
HGW45HC								128.8	171.2	28.9																	125.3	191.85	2.63	2.68	2.68	3.69	
HGW55CC	70	13	43.5	140	116	12	95	117.7	166.7	17.35	11	12.9	M14	17.5	26.5	17	12	19	53	44	23	20	16	120	30	M14x45	153.2	211.23	3.69	2.64	2.64	4.52	15.08
HGW55HC								155.8	204.8	36.4																	184.9	276.23	4.88	4.57	4.57	5.96	
HGW65CC	90	15	53.5	170	142	14	110	144.2	200.2	23.1	14	12.9	M16	25	37.5	23	15	15	63	53	26	22	18	150	35	M16x50	213.2	287.48	6.65	4.27	4.27	9.17	21.18
HGW65HC								203.6	259.6	52.8																	277.8	420.17	9.38	7.38	7.38	12.89	

Note : 1 kgf = 9.81 N

(6) Dimesions for HGR-T (Rail Mounting from Bottom)

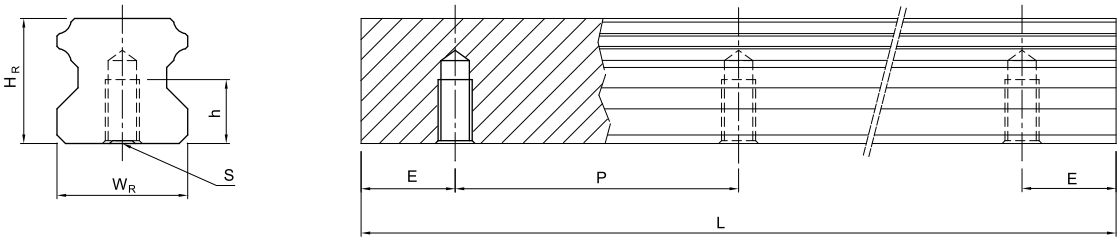

Model No.	Dimensions of Rail (mm)						Weight
	W_R	H_R	S	h	P	E	(kg/m)
HGR15T	15	15	M5 x 0.8P	8	60	20	1.48
HGR20T	20	17.5	M6 x 1P	10	60	20	2.29
HGR25T	23	22	M6 x 1P	12	60	20	3.35
HGR30T	28	26	M8 x 1.25P	15	80	20	4.67
HGR35T	34	29	M8x1.25P	17	80	20	6.51
HGR45T	45	38	M12 x 1.75P	24	105	22.5	10.87
HGR55T	53	44	M14 x 2P	24	120	30	15.67
HGR65T	63	53	M20 x 2.5P	30	150	35	21.73

EG Series

Low Profile Ball Type

2-2 EG Series - Low Profile Ball Type Linear Guideway

2-2-1 Features of the EG Series Linear Guideway

The design of the EG series offers a low profile, high load capacity, and high rigidity. It also features an equal load rating in all four directions and self-aligning capability to absorb installation-error, allowing for higher accuracies. Additionally, the lower assembly height and the shorter length make the EG series more suitable for high-speed, automation machines and applications where space is limited.
The retainer is designed to hold the balls in the block even when it is removed from the rail.

2-2-2 Construction of EG Series

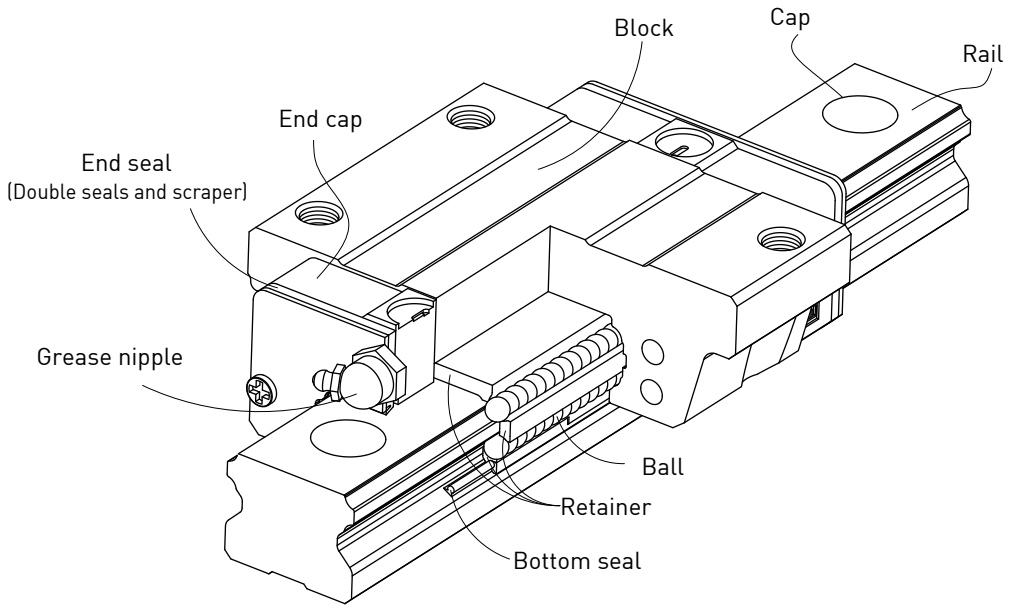

- Rolling circulation system: Block, rail, end cap and retainer
- Lubrication system: Grease nipple and piping Joint
- Dust protection system: End seal, bottom seal, cap and scraper

2-2-3 Model Number of EG Series

EG series linear guideways are classified into non-interchangeable and interchangeable types. The sizes of these two types are the same as one another. The main difference is that the interchangeable type of blocks and rails can be freely exchanged and they can maintain P-class accuracy. Because of strict dimensional control, the interchangeable type linear guideways are a wise choice for customers when rails do not need to be matched for an axis. The model number of the EG series identifies the size, type, accuracy class, preload class, etc.

(1) Non-interchangeable type

EG W 25 C A E 2 R 1600 E ZA P M II + DD/E2+RC

- EG Series
- Block Type
  W : Flange Type
  H : Square Type
- Model size
  15, 20, 25, 30, 35
- Load Type
  C : Heavy Load
  S: Medium Load
- Block Mounting Type
  A : Mounting from Top
  B : Bottom
- E: Special Block
  None: Standard Block
- No. of Blocks per Rail
- Rail Mounting Type
  R/U: Mounting From Top
  T : Bottom
- Rail Length (mm)
- E: Special Rail
  None: Standard rail
- Preload Code: Z0, ZA, ZB
- Precision Code: C, H, P, SP, UP
- Meterial[3]: No symbol M
- No.of Rails per Axis set [1]
- Dust Protection[2]
- E2: Self-Lubrication
  SE: Metallic End Cap
- RC:Reinforced Cap

Note: 1. The roman numerals are used to express the number of matched rails used in one axis. When a single rail is used in an axis, no symbol is indicated.
2. No symbol indicates standard protection (end seal and bottom seal).
ZZ : End seal, bottom seal and scraper
KK: Double seals, bottom seal and scraper.
DD: Double seals and bottom seal
3. No symbol: Carbon Steel, M: Stainless Steel
4. The stainless steel is available for EG15C.

(2) Interchangeable type

- Model Number of EG Block

EG W 25 C A E ZA P M + DD/E2

- EG Series
- Block Type
  W : Flange Type
  H : Square Type
- Model size
  15, 20, 25, 30, 35
- Load Type
  C : Heavy Load
  S: Medium Load
- Block Mounting Type
  A : Mounting From Top
  B : Bottom
- E: Special Block
  None: Standard block
- Preload Code : Z0, ZA
- Precision Code : C, H, P
- Meterial[3]: No symbol M
- Dust Protection[2]
- E2: Self-Lubricant
  SE: Metallic End Cap

- Model Number of EG Rail

EG R 25 R 1600 E P M + RC

- EG Series
- Interchangeable Rail
- Model size
  15, 20, 25, 30, 35
- Rail Mounting Type
  R/U : Mounting From Top
  T : Bottom
- Rail Length (mm)
- E: Special Rail,
  None: Standard Rail
- Precision Code : C, H, P
- Meterial[3]: No symbol M
- RC:Reinforced Cap

EG Series

Low Profile Ball Type

2-2-4 Types

(1) Block types

HIWIN offers two types of linear guideways, flange and square types.

Table 2-2-1 **Block Types**

Type	Model	Shape	Height (mm)	Rail Length (mm)	Main Applications
Square	EGH-SA EGH-CA	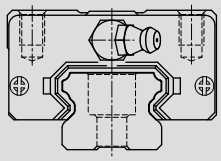	24 ↓ 48	100 ↓ 4000	○ Automation devices ○ High-speed transportation equipment ○ Precision measuring equipment ○ Semiconductor manufacturing equipment
Flange	EGW-SA EGW-CA	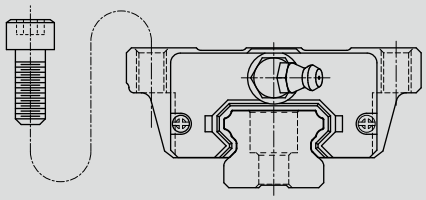	24 ↓ 48	100 ↓ 4000	
	EGW-SB EGW-CB	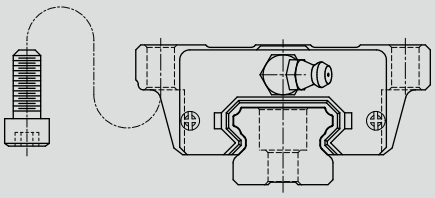	24 ↓ 48	100 ↓ 4000	

*Please refer to the chapter 2-2-13 for the dimensional detail.

(2) Rail types

Besides the standard top mounting type, HIWIN also offers bottom mounting type rails.

Table 2-2-2 **Rail Types**

Mounting from Top	Mounting from Bottom
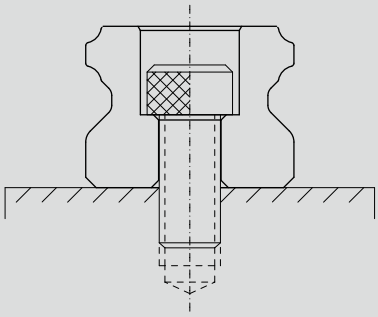	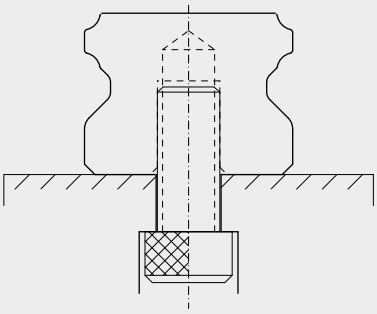

2-2-5 Accuracy

The accuracy of the EG series can be classified into 5 classes: normal(C), high(H), precision(P), super precision(SP), and ultra precision(UP). Choose the class by referencing the accuracy of selected equipment.

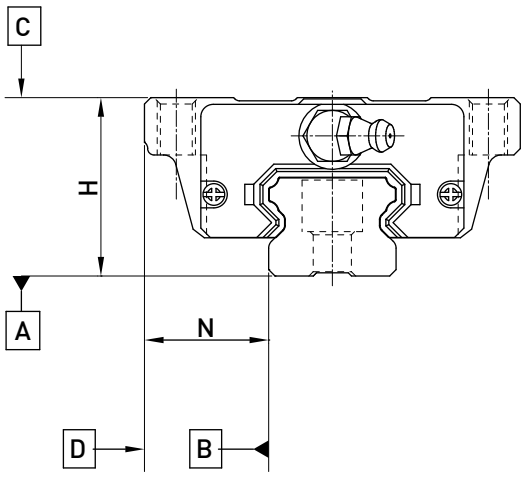

(1) Accuracy of non-interchangeable guideways

Table 2-2-3 **Accuracy Standards** Unit: mm

Item	EG - 15, 20				
Accuracy Classes	Normal (C)	High (H)	Precision (P)	Super Precision (SP)	Ultra Precision (UP)
Dimensional tolerance of height H	± 0.1	± 0.03	0 - 0.03	0 - 0.015	0 - 0.008
Dimensional tolerance of width N	± 0.1	± 0.03	0 - 0.03	0 - 0.015	0 - 0.008
Variation of height H	0.02	0.01	0.006	0.004	0.003
Variation of width N	0.02	0.01	0.006	0.004	0.003
Running parallelism of block surface C to surface A	See Table 2-2-7				
Running parallelism of block surface D to surface B	See Table 2-2-7				

Table 2-2-4 **Accuracy Standards** Unit: mm

Item	EG - 25, 30, 35				
Accuracy Classes	Normal (C)	High (H)	Precision (P)	Super Precision (SP)	Ultra Precision (UP)
Dimensional tolerance of height H	± 0.1	± 0.04	0 - 0.04	0 - 0.02	0 - 0.01
Dimensional tolerance of width N	± 0.1	± 0.04	0 - 0.04	0 - 0.02	0 - 0.01
Variation of height H	0.02	0.015	0.007	0.005	0.003
Variation of width N	0.03	0.015	0.007	0.005	0.003
Running parallelism of block surface C to surface A	See Table 2-2-7				
Running parallelism of block surface D to surface B	See Table 2-2-7				

EG Series

Low Profile Ball Type

(2) Accuracy of interchangeable guideways

Table 2-2-5 **Accuracy Standards**

Unit: mm

Item	EG - 15, 20		
Accuracy Classes	Normal (C)	High (H)	Precision (P)
Dimensional tolerance of height H	± 0.1	± 0.03	± 0.015
Dimensional tolerance of width N	± 0.1	± 0.03	± 0.015
Variation of height H	0.02	0.01	0.006
Variation of width N	0.02	0.01	0.006
Running parallelism of block surface C to surface A	See Table 2-2-7		
Running parallelism of block surface D to surface B	See Table 2-2-7		

Table 2-2-6 **Accuracy Standards**

Unit: mm

Item	EG - 25, 30, 35		
Accuracy Classes	Normal (C)	High (H)	Precision (P)
Dimensional tolerance of height H	± 0.1	± 0.04	± 0.02
Dimensional tolerance of width N	± 0.1	± 0.04	± 0.02
Variation of height H	0.02	0.015	0.007
Variation of width N	0.03	0.015	0.007
Running parallelism of block surface C to surface A	See Table 2-2-7		
Running parallelism of block surface D to surface B	See Table 2-2-7		

(3) Accuracy of running parallelism

Table 2-2-7 **Accuracy of Running Parallelism**

Rail Length (mm)	Accuracy (μm)				
	C	H	P	SP	UP
~ 100	12	7	3	2	2
100 ~ 200	14	9	4	2	2
200 ~ 300	15	10	5	3	2
300 ~ 500	17	12	6	3	2
500 ~ 700	20	13	7	4	2
700 ~ 900	22	15	8	5	3
900 ~ 1,100	24	16	9	6	3
1,100 ~ 1,500	26	18	11	7	4
1,500 ~ 1,900	28	20	13	8	4
1,900 ~ 2,500	31	22	15	10	5
2,500 ~ 3,100	33	25	18	11	6
3,100 ~ 3,600	36	27	20	14	7
3,600 ~ 4,000	37	28	21	15	7

2-2-6 Preload

(1) Definition

A preload can be applied to each guideway. Generally, a linear motion guideway has a negative clearance between the groove and balls in order to improve stiffness and maintain high precision. The figure shows that adding a preload can improve stiffness of the linear guideway. A preload no greater than ZA would be recommended for model sizes smaller than EG20. This will avoid an over-loaded condition that would affect guideway life.

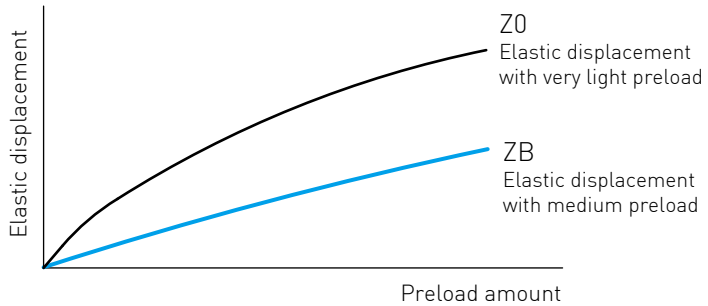

(2) Preload classes

HIWIN offers three standard preloads for various applications and conditions.

Table 2-2-8 **Preload Classes**

Class	Code	Preload	Condition
Very Light Preload	Z0	0~ 0.02C	Certain load direction,low impact, low precision required
Light Preload	ZA	0.03C~0.05C	low load and high precision required
Medium Preload	ZB	0.06C~ 0.08C	High rigidity required, with vibration and impact

Class	Interchangeable Guideway	Non-Interchangeable Guideway
Preload classes	Z0, ZA	Z0, ZA, ZB

Note: The "C" in the preload column denotes basic dynamic load rating.

(3) Stiffness performance

Stiffness depends on preload. The following table shows stiffness value of each size.

Table 2-2-9 **Radial stiffness for EG Series**

Load type	Series / Size	Stiffness (N/μm)		
		Z0	ZA	ZB
Medium load	EG 15S	87	186	246
	EG 20S	114	267	369
	EG 25S	138	307	415
	EG 30S	166	335	447
	EG 35S	189	369	492
Heavy load	EG 15C	141	323	429
	EG 20C	181	444	615
	EG 25C	219	510	668
	EG 30C	265	555	745
	EG 35C	307	615	816

EG Series

Low Profile Ball Type

2-2-7 Lubrication

(1) Grease

Grease nipple

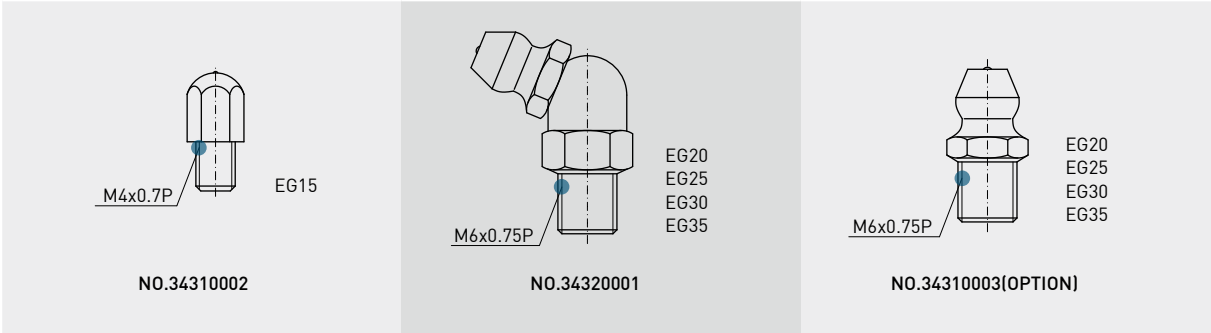

Mounting location

The standard location of the grease fitting is at both ends of the block, the nipple may be mounted in the side or top of the block. For lateral installation, we recommend that the nipple be mounted to the non-reference side, otherwise please contact us. When lubricating from above, in the recess for the O-ring, a smaller, preformed recess can be found. Preheat the 0.8 mm diameter metal tip. Carefully open the small recess with the metal tip and pierce through it. Insert a round sealing ring into the recess. (The round sealing ring is not supplied with the block) Do not open the small recess with a drill bit this may introduce the danger of contamination. It is possible to carry out the lubrication by using the oil-piping joint.

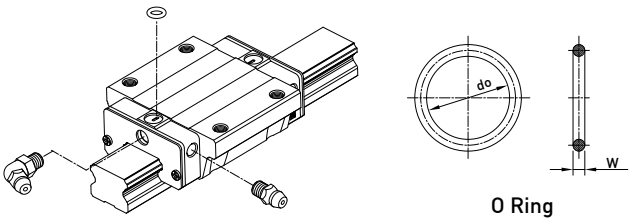

Table 2-2-10 **O-Ring size and max. permissible depth for piercing**

Size	O-Ring		Lube hole at top: max. permissible depth for piercing
	do(mm)	W (mm)	T_{max}(mm)
EG15	2.5 ± 0.15	1.5 ± 0.15	6.9
EG20	4.5 ± 0.15	1.5 ± 0.15	8.4
EG25	4.5 ± 0.15	1.5 ± 0.15	10.4
EG30	4.5 ± 0.15	1.5 ± 0.15	10.4
EG35	4.5 ± 0.15	1.5 ± 0.15	10.8

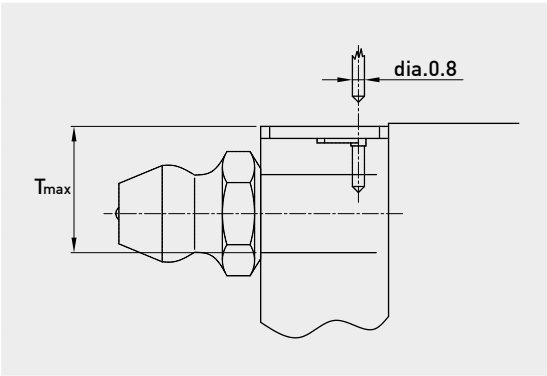

The oil amount for a block filled with grease

Table 2-2-11 **The oil amount for a block filled with grease**

Size	Medium Load (cm^3)	Heavy Load (cm^3)
EG15	0.8	1.4
EG20	1.5	2.4
EG25	2.8	4.6
EG30	3.7	6.3
EG35	5.6	6.6

Frequency of replenishment

Check the grease every 100 km, or every 3-6 months.

(2) Oil

The recommended viscosity of oil is about 32~150cSt. If you need to use oil-type lubrication, please inform us.

Types of oil piping joint

LF-64

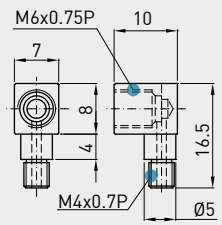

NO.97000EA1 EG15

LF-76

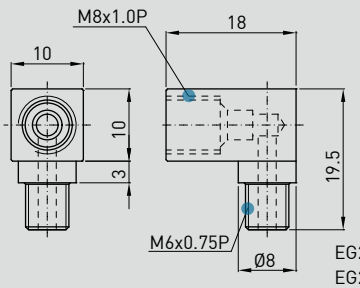

NO.970002A1 EG20 EG25 EG30 EG35

LF-86

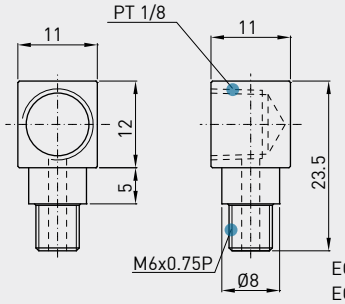

NO.970004A1 EG20 EG25 EG30 EG35

SF-64

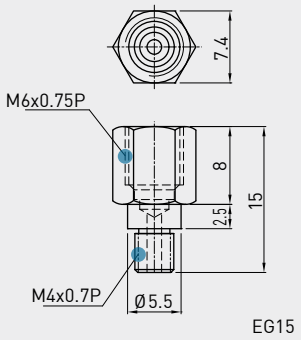

NO.97001TA1 EG15

SF-76

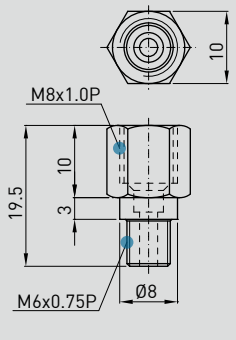

NO.970001A1 EG20 EG25 EG30 EG35

SF-86

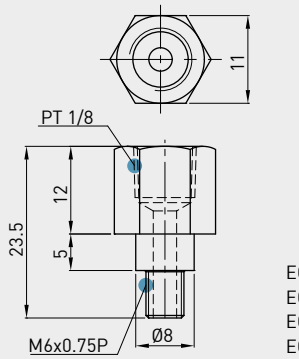

NO.970003A1 EG20 EG25 EG30 EG35

Oil feeding rate

Table 2-2-12 **oil feed rate**

Size	feed rate (cm^3/hr)	Size	feed rate (cm^3/hr)
EG15	0.1	EG30	0.2
EG20	0.133	EG35	0.233
EG25	0.167		

EG Series

Low Profile Ball Type

2-2-8 Dust Protection Equipment

(1) Codes of equipment

If the following equipment is needed, please indicate the code followed by the model number.

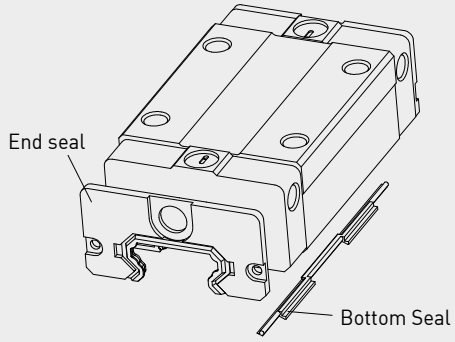

No symbol: Standard Protection
(End seal + Bottom seal)

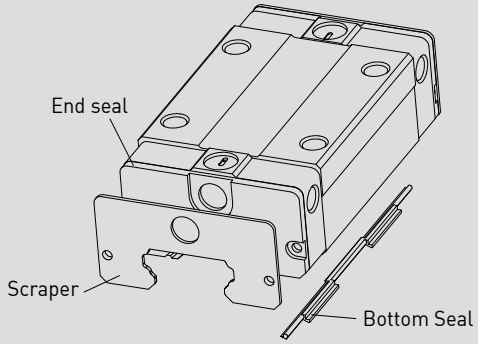

ZZ(End seal + Bottom seal + Scraper)

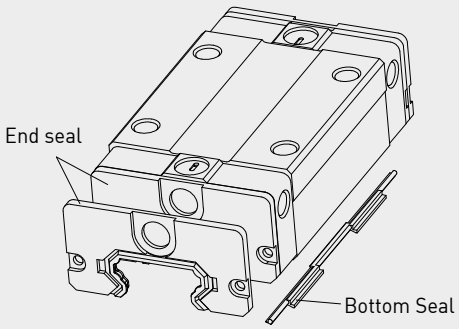

DD (Double seals + Bottom Seal)

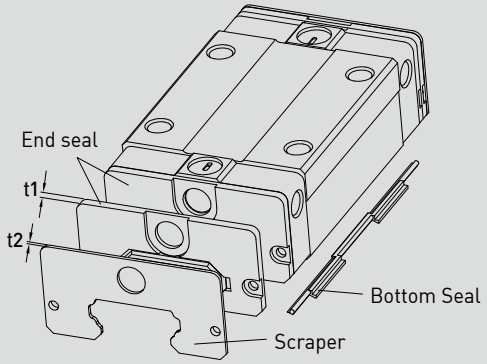

KK (Double seals + Bottom Seal + Scraper)

(2) End seal and bottom seal

Protects against contaminants entering the block. Reduces potential for groove damage resulting in a reduction of life ratings.

(3) Double seals

Removing foreign matters from the rail to prevent contaminants from entering the block.

Table 2-2-13 **Dimensions of end seal**

Size	Thickness (t1) (mm)	Size	Thickness (t1) (mm)
EG15 ES	2	EG30 ES	2
EG20 ES	2	EG35 ES	2
EG25 ES	2		

(4) Scraper

Clears larger contaminants, such as weld spatter and metal cuttings, from the rail. Metal scraper protects end seals from excessive damage.

Table 2-2-14 **Dimensions of Scraper**

Size	Thickness (t2) (mm)	Size	Thickness (t2) (mm)
EG15 SC	0.8	EG30 SC	1
EG20 SC	0.8	EG35 SC	1.5
EG25 SC	1		

(5) Bolt caps for rail mounting holes

Rail mounting hole caps prevent foreign matter from accumulating in the mounting holes. Caps are included with the rail package.

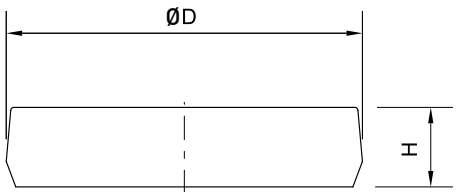

Table 2-2-15 **Dimensions of Bolt Caps for Rail Mounting Holes**

Rail size	Bolt size	Diameter(D) (mm)	Thickness(H) (mm)
EGR15R	M3	6.15	1.2
EGR20R	M5	9.65	2.5
EGR25R	M6	11.15	2.5
EGR30R	M6	11.15	2.5
EGR35R	M8	14.20	3.5
EGR15U	M4	7.65	1.1
EGR30U	M8	14.20	3.5

(6) Dimensions of block equipped with the dustproof parts

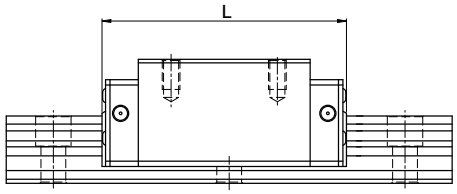

Table 2-2-16 **Overall block length**

unit: mm

Size	Overall block length (L)			
	SS	ZZ	DD	KK
EG15S	40.1 (42.5)	41.7 (46.1)	44.1 (46.5)	45.7 (50.1)
EG15C	56.8 (59.2)	58.4 (62.8)	60.8 (63.2)	62.4 (66.8)
EG20S	50.0 (54.0)	51.6 (57.6)	54.0 (58.0)	55.6 (61.6)
EG20C	69.1 (73.1)	70.7 (76.7)	73.1 (77.1)	74.7 (80.7)
EG25S	59.1 (63.1)	61.1 (67.1)	63.1 (67.1)	65.1 (71.1)
EG25C	82.6 (86.6)	84.6 (90.6)	86.6 (90.6)	88.6 (94.6)
EG30S	69.5 (73.5)	71.5 (77.5)	73.5 (77.5)	75.5 (81.5)
EG30C	98.1 (102.1)	100.1 (106.1)	102.1 (106.1)	104.1 (110.1)
EG35S	75.0 (79.0)	78.0 (84.0)	79.0 (83.0)	82.0 (88.0)
EG35C	108.0 (112.0)	111.0 (117.0)	112.0 (116.0)	115.0 (121.0)

Note : The marking of "( )" denotes the maximum block length with screws, lips of end seals, etc.

EG Series

Low Profile Ball Type

2-2-9 Friction

The maximum value of resistance per end seal are as shown in the table.

Table 2-2-17 **Seal Resistance**

Size	Resistance N (kgf)
EG15	1.47 (0.15)
EG20	1.96 (0.2)
EG25	1.96 (0.2)
EG30	2.45 (0.25)
EG35	1.96 (0.2)

Note: 1. 1kgf=9.81N
2. Please inform HIWIN if low friction request is required.

2-2-10 Mounting Surface Accuracy Tolerance

Because of the circular-arc contact design, the EG linear guideway can withstand surface-error installation and deliver smooth linear motion. When the mounting surface meets the accuracy requirements of the installation, the high accuracy and rigidity of the guideway will be obtained without any difficulty. For faster installation and smoother movement, HIWIN offers a preload with normal clearance because of its ability to absorb higher deviations in mounting surface inaccuracies.

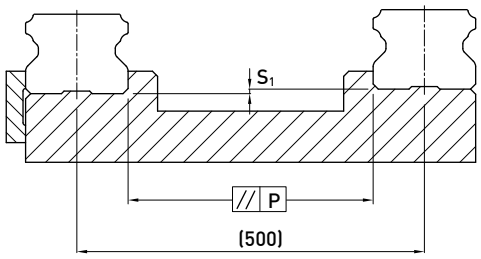

Table 2-2-18 **Max. Parallelism Tolerance (P)**

unit: μm

Size	Preload classes		
	Z0	ZA	ZB
EG15	25	18	-
EG20	25	20	18
EG25	30	22	20
EG30	40	30	27
EG35	50	35	30

Table 2-2-19 **Max. Tolerance of Reference Surface Height (S_1)**

unit: μm

Size	Preload classes		
	Z0	ZA	ZB
EG15	130	85	-
EG20	130	85	50
EG25	130	85	70
EG30	170	110	90
EG35	210	150	120

Note : Permissible value is proportional to the axial distance

2-2-11 Cautions for Installation

(1) Shoulder heights and chamfers

Improper shoulder heights and fillets of mounting surfaces will cause a deviation in accuracy and the interference with the rail or block. As long as the recommended shoulder heights and fillets are followed, installation inaccuracies should be eliminated.

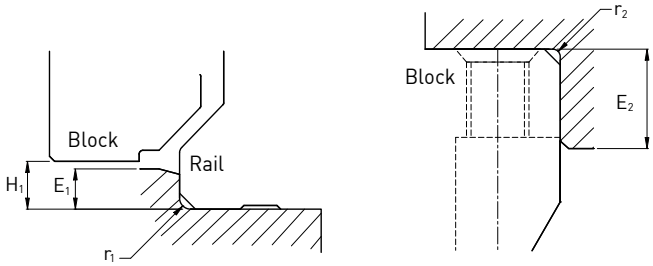

Table 2-2-20 **Shoulder Heights and Chamfers**

unit: mm

Size	Max. radius of fillets r_1 (mm)	Max. radius of fillets r_2 (mm)	Shoulder height beside the rail E_1 (mm)	Shoulder height beside the block E_2 (mm)	Clearance under block H_1 (mm)
EG15	0.5	0.5	2.7	5.0	4.5
EG20	0.5	0.5	5.0	7.0	6.0
EG25	1.0	1.0	5.0	7.5	7.0
EG30	1.0	1.0	7.0	7.0	10.0
EG35	1.0	1.0	7.5	9.5	11.0

(2) Tightening Torque of Bolts for Installation

Improperly tightened mounting bolts will seriously affect the accuracy of linear guide installations. The following tightening torques for different sizes of bolts are recommended.

Table 2-2-21 **Tightening Torque**

Size	Bolt size	Torque N-cm(kgf-cm)		
		Iron	Casting	Aluminum
EG 15	M3×0.5P×16L	186 (19)	127 (13)	98 (10)
EG 20	M5×0.8P×16L	883 (90)	588 (60)	441 (45)
EG 25	M6×1P×20L	1373 (140)	921 (94)	686 (70)
EG 30	M6×1P×25L	1373 (140)	921 (94)	686 (70)
EG 35	M8×1.25P×25L	3041 (310)	2010 (205)	1470 (150)

Note: 1 kgf = 9.81 N

EG Series

Low Profile Ball Type

2-2-12 Standard and Maximum Lengths of Rail

HIWIN offers a number of standard rail lengths. Standard rail lengths feature end mounting hole placements set to predetermined values (E). For non-standard rail lengths, be sure to specify the E-value to be no greater than 1/2 the pitch (P) dimension. An E-value greater than this will result in unstable rail ends.

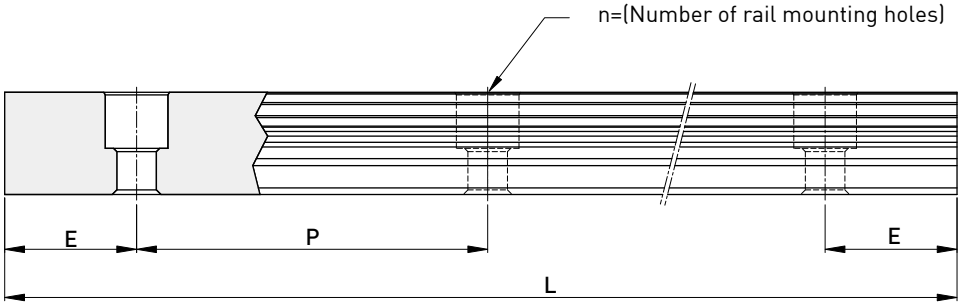

$$L = (n-1) \times P + 2 \times E \qquad \text{Eq.2.2}$$

L : Total length of rail (mm)
n : Number of mounting holes
P : Distance between any two holes (mm)
E : Distance from the center of the last hole to the edge (mm)

Table 2-2-22 **Rail Standard Length and Max. Length** unit: mm

Item	EGR15	EGR20	EGR25	EGR30	EGR35
Standard Length L(n)	160 (3)	220 (4)	220 (4)	280 (4)	280 (4)
	220 (4)	280 (5)	280 (5)	440 (6)	440 (6)
	280 (5)	340 (6)	340 (6)	600 (8)	600 (8)
	340 (6)	460 (8)	460 (8)	760 (10)	760 (10)
	460 (8)	640 (11)	640 (11)	1,000 (13)	1,000 (13)
	640 (11)	820 (14)	820 (14)	1,640 (21)	1,640 (21)
	820 (14)	1,000 (17)	1,000 (17)	2,040 (26)	2,040 (26)
		1,240 (21)	1,240 (21)	2,520 (32)	2,520 (32)
		1,600 (27)	1,600 (27)	3,000 (38)	3,000 (38)
Pitch (P)	60	60	60	80	80
Distance to End (E_s)	20	20	20	20	20
Max. Standard Length	4,000(67)	4,000 (67)	4,000 (67)	3,960 (50)	3,960 (50)
Max. Length	4,000	4,000	4,000	4,000	4,000

Note : 1. Tolerance of E value for standard rail is 0.5~-0.5 mm. Tolerance of E value for jointed rail is 0~-0.3 mm.
2. Maximum standard length means the max. rail length with standard E value on both sides.
3. If different E value is needed, please contact HIWIN.
4. EGR15 of stainless steel is supplied with the maximum length of 2000mm.

2-2-13 Dimensions for HIWIN EG Series

(1) EGH-SA / EGH-CA

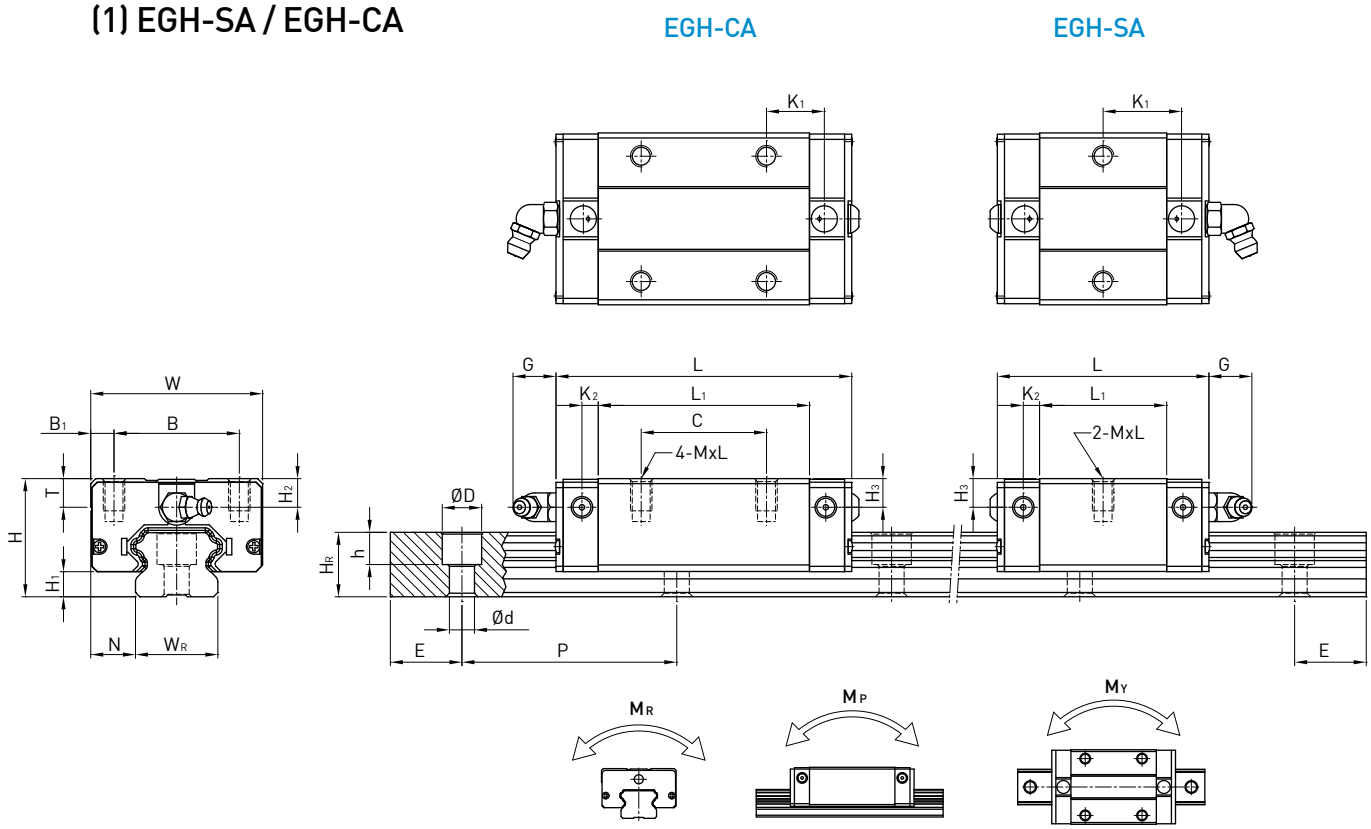

Model No.	Dimensions of Assembly (mm)			Dimensions of Block (mm)													Dimensions of Rail (mm)							Mounting Bolt for Rail	Basic Dynamic Load Rating	Basic Static Load Rating	Static Rated Moment			Weight	
	H	H_1	N	W	B	B_1	C	L_1	L	K_1	K_2	G	Mxl	T	H_2	H_3	W_R	H_R	D	h	d	P	E	(mm)	C(kN)	C_0 (kN)	M_R kN-m	M_P kN-m	M_Y kN-m	Block kg	Rail kg/m
EGH15SA	24	4.5	9.5	34	26	4	-	23.1	40.1	14.8	3.5	5.7	M4x6	6	5.5	6	15	12.5	6	4.5	3.5	60	20	M3x16	5.35	9.40	0.08	0.04	0.04	0.09	1.25
EGH15CA							26	39.8	56.8	10.15															7.83	16.19	0.13	0.10	0.10	0.15	
EGH20SA	28	6	11	42	32	5	-	29	50	18.75	4.15	12	M5x7	7.5	6	6	20	15.5	9.5	8.5	6	60	20	M5x16	7.23	12.74	0.13	0.06	0.06	0.15	2.08
EGH20CA							32	48.1	69.1	12.3															10.31	21.13	0.22	0.16	0.16	0.24	
EGH25SA	33	7	12.5	48	35	6.5	-	35.5	59.1	21.9	4.55	12	M6x9	8	8	8	23	18	11	9	7	60	20	M6x20	11.40	19.50	0.23	0.12	0.12	0.25	2.67
EGH25CA							35	59	82.6	16.15															16.27	32.40	0.38	0.32	0.32	0.41	
EGH30SA	42	10	16	60	40	10	-	41.5	69.5	26.75	6	12	M8x12	9	8	9	28	23	11	9	7	80	20	M6x25	16.42	28.10	0.40	0.21	0.21	0.45	4.35
EGH30CA							40	70.1	98.1	21.05															23.70	47.46	0.68	0.55	0.55	0.76	
EGH35SA	48	11	18	70	50	10	-	45	75	28.5	7	12	M8x12	10	8.5	8.5	34	27.5	14	12	9	80	20	M8x25	22.66	37.38	0.56	0.31	0.31	0.74	6.14
EGH35CA							50	78	108	20															33.35	64.84	0.98	0.69	0.69	1.10	

Note : 1 kgf = 9.81 N

EG Series

Low Profile Ball Type

(2) EGW-SA / EGW-CA

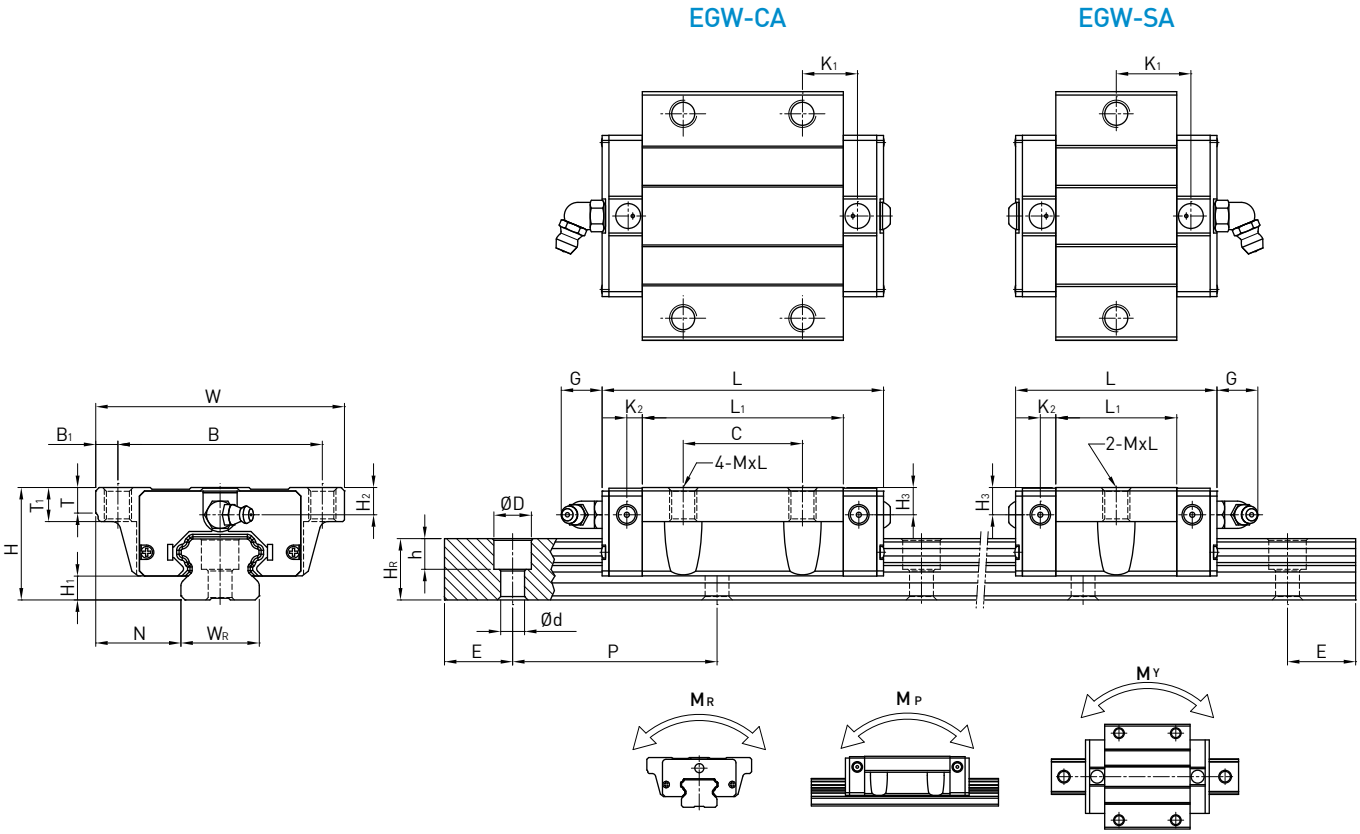

Model No.	Dimensions of Assembly (mm)			Dimensions of Block (mm)													Dimensions of Rail (mm)							Mounting Bolt for Rail	Basic Dynamic Load Rating	Basic Static Load Rating	Static Rated Moment			Weight	
	H	H_1	N	W	B	B_1	C	L_1	L	K_1	K_2	G	M	T	T_1	H_2	H_3	W_R	H_R	D	h	d	P	E	(mm)	C(kN)	C_0 (kN)	M_R kN-m	M_P kN-m	M_Y kN-m	Block kg	Rail kg/m
EGW15SA	24	4.5	18.5	52	41	5.5	-	23.1	40.1	14.8	3.5	5.7	M5	5	7	5.5	6	15	12.5	6	4.5	3.5	60	20	M3x16	5.35	9.40	0.08	0.04	0.04	0.12	1.25
EGW15CA							26	39.8	56.8	10.15																7.83	16.19	0.13	0.10	0.10	0.21	
EGW20SA	28	6	19.5	59	49	5	-	29	50	18.75	4.15	12	M6	7	9	6	6	20	15.5	9.5	8.5	6	60	20	M5x16	7.23	12.74	0.13	0.06	0.06	0.19	2.08
EGW20CA							32	48.1	69.1	12.3																10.31	21.13	0.22	0.16	0.16	0.32	
EGW25SA	33	7	25	73	60	6.5	-	35.5	59.1	21.9	4.55	12	M8	7.5	10	8	8	23	18	11	9	7	60	20	M6x20	11.40	19.50	0.23	0.12	0.12	0.35	2.67
EGW25CA							35	59	82.6	16.15																16.27	32.40	0.38	0.32	0.32	0.59	
EGW30SA	42	10	31	90	72	9	-	41.5	69.5	26.75	6	12	M10	7	10	8	9	28	23	11	9	7	80	20	M6x25	16.42	28.10	0.40	0.21	0.21	0.62	4.35
EGW30CA							40	70.1	98.1	21.05																23.70	47.46	0.68	0.55	0.55	1.04	
EGW35SA	48	11	33	100	82	9	-	45	75	28.5	7	12	M10	10	13	8.5	8.5	34	27.5	14	12	9	80	20	M8x25	22.66	37.38	0.56	0.31	0.31	0.84	6.14
EGW35CA							50	78	108	20																33.35	64.84	0.98	0.69	0.69	1.45	

Note : 1 kgf = 9.81 N

(3) EGW-SB / EGW-CB

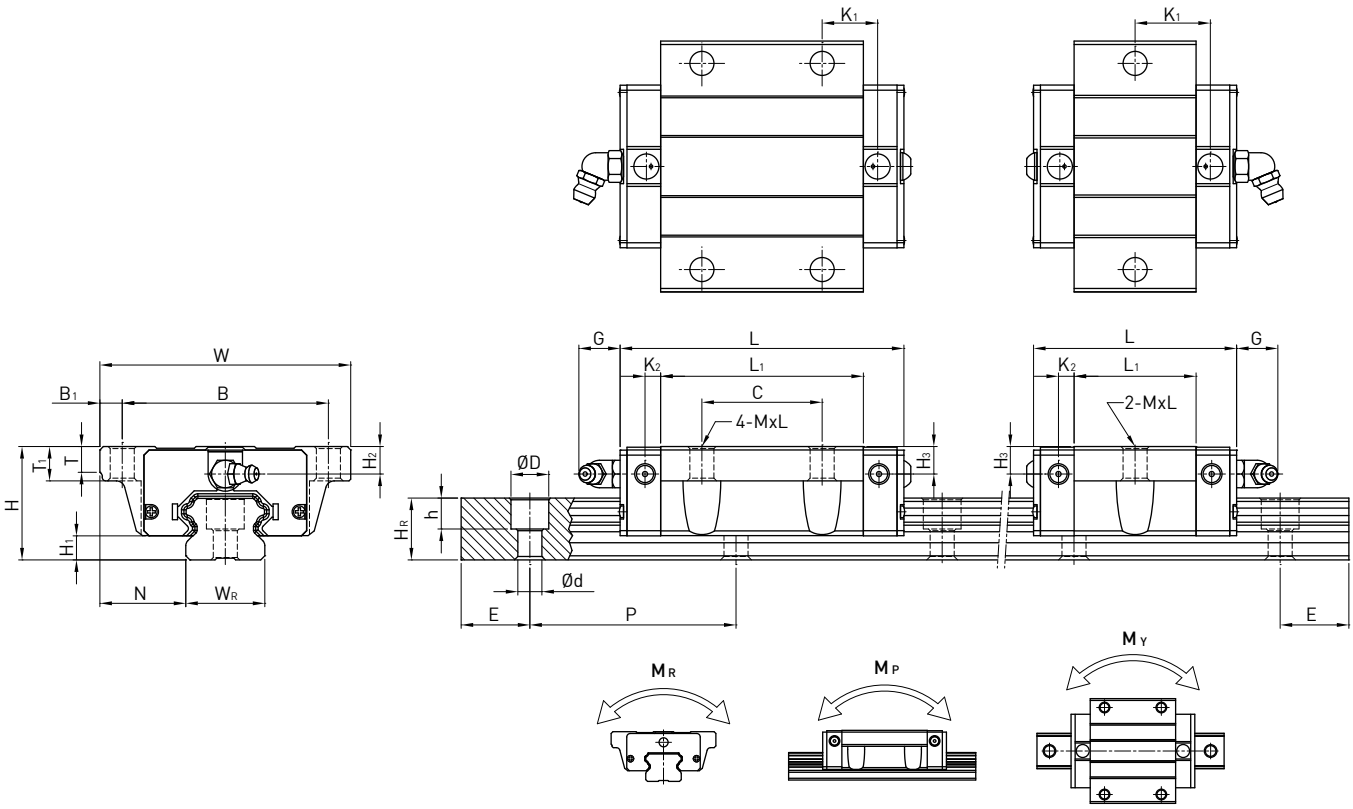

Model No.	Dimensions of Assembly (mm)			Dimensions of Block (mm)														Dimensions of Rail (mm)							Mounting Bolt for Rail	Basic Dynamic Load Rating	Basic Static Load Rating	Static Rated Moment			Weight	
	H	H_1	N	W	B	B_1	C	L_1	L	K_1	K_2	G	M	T	T_1	H_2	H_3	W_R	H_R	D	h	d	P	E	(mm)	C(kN)	C_0 (kN)	M_R kN-m	M_P kN-m	M_Y kN-m	Block kg	Rail kg/m
EGW15SB	24	4.5	18.5	52	41	5.5	-	23.1	40.1	14.8	3.5	5.7	Ø4.5	5	7	5.5	6	15	12.5	6	4.5	3.5	60	20	M3x16	5.35	9.40	0.08	0.04	0.04	0.12	1.25
EGW15CB							26	39.8	56.8	10.15																7.83	16.19	0.13	0.10	0.10	0.21	
EGW20SB	28	6	19.5	59	49	5	-	29	50	18.75	4.15	12	Ø5.5	7	9	6	6	20	15.5	9.5	8.5	6	60	20	M5x16	7.23	12.74	0.13	0.06	0.06	0.19	2.08
EGW20CB							32	48.1	69.1	12.3																10.31	21.13	0.22	0.16	0.16	0.32	
EGW25SB	33	7	25	73	60	6.5	-	35.5	59.1	21.9	4.55	12	Ø7	7.5	10	8	8	23	18	11	9	7	60	20	M6x20	11.40	19.50	0.23	0.12	0.12	0.35	2.67
EGW25CB							35	59	82.6	16.15																16.27	32.40	0.38	0.32	0.32	0.59	
EGW30SB	42	10	31	90	72	9	-	41.5	69.5	26.75	6	12	Ø9	7	10	8	9	28	23	11	9	7	80	20	M6x25	16.42	28.10	0.40	0.21	0.21	0.62	4.35
EGW30CB							40	70.1	98.1	21.05																23.70	47.46	0.68	0.55	0.55	1.04	
EGW35SB	48	11	33	100	82	9	-	45	75	28.5	7	12	Ø9	10	13	8.5	8.5	34	27.5	14	12	9	80	20	M8x25	22.66	37.38	0.56	0.31	0.31	0.84	6.14
EGW 35CB							50	78	108	20																33.35	64.84	0.98	0.69	0.69	1.45	

Note : 1 kgf = 9.81 N

EG Series

Low Profile Ball Type

(4) Dimensions for EGR-U (large mounting hole, rail mounting from top)

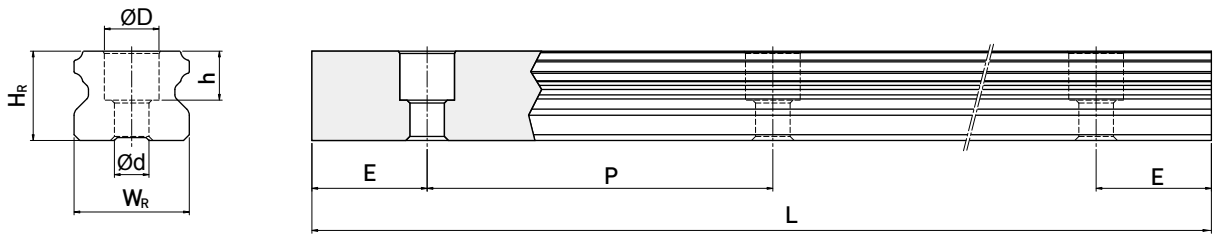

Model No.	Mounting Bolt for Rail(mm)	Dimensions of Rail (mm)							Weight
		W_R	H_R	D	h	d	P	E	(kg/m)
EGR15U	M4x16	15	12.5	7.5	5.3	4.5	60	20	1.23
EGR30U	M8x25	28	23	14	12	9	80	20	4.23

(5) Dimensions for EGR-T (rail mounting from bottom)

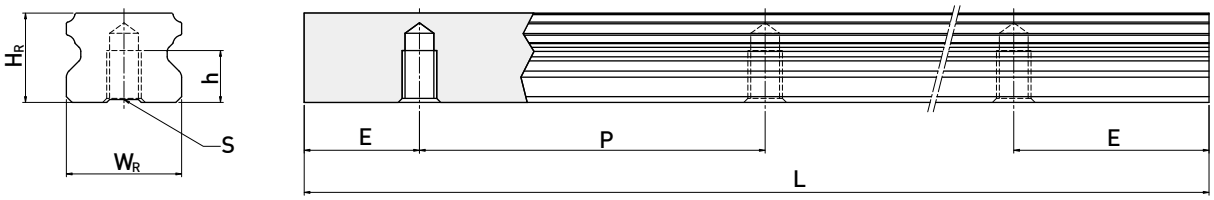

Model No.	Dimensions of Rail (mm)						Weight
	W_R	H_R	S	h	P	E	(kg/m)
EGR15T	15	12.5	M5 x 0.8P	7	60	20	1.26
EGR20T	20	15.5	M6 x 1P	9	60	20	2.15
EGR25T	23	18	M6 x 1P	10	60	20	2.79
EGR30T	28	23	M8 x 1.25P	14	80	20	4.42
EGR35T	34	27.5	M8 x 1.25P	17	80	20	6.34

2-3 WE Type – Four-Row Wide Rail Linear Guideway

2-3-1 Construction

The WE series features equal load ratings in the radial, reverse radial and the lateral direction with contact points at 45 degrees. This along with the wide rail, allows the guide way to be rated for high loads, moments and rigidity. By design, it has a self-aligning capacity that can absorb most installation errors and can meet high accuracy standards. The ability to use a single rail and to have the low profile with a low center of gravity is ideal where space is limited and/or high moments are required.

2-3-2 Construction of WE Series

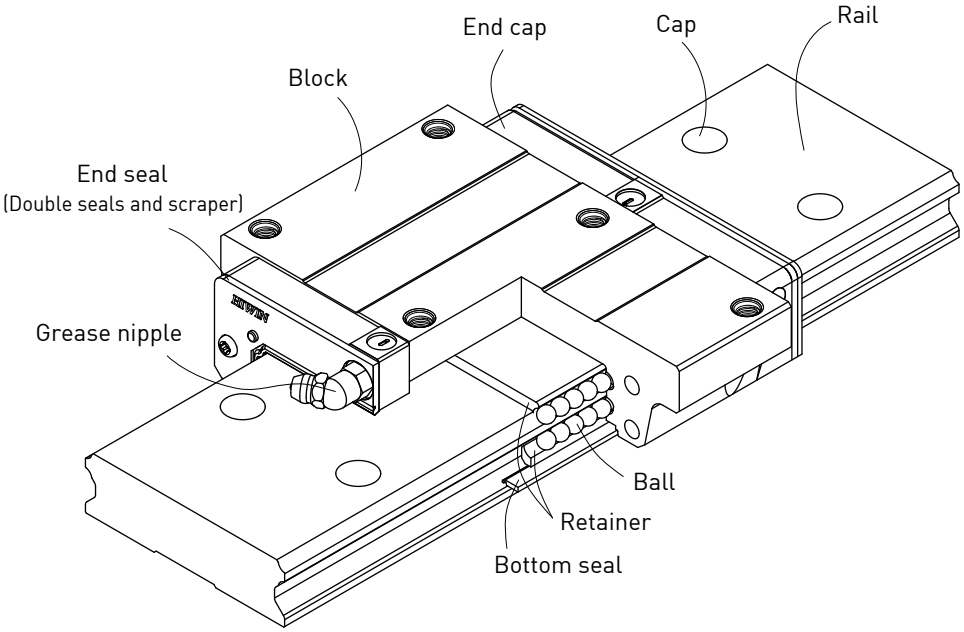

- Rolling circulation system: Block, rail, end cap and retainer
- Lubrication system: Grease nipple and piping Joint
- Dust protection system: End seal, bottom seal, cap and scraper

2-3-3 Model Number of WE Series

WE series linear guideways are classified into non-interchangeable and interchangeable types. The sizes of these two types are the same as one another. The main difference is that the interchangeable type of blocks and rails can be freely exchanged and they can maintain P-class accuracy. Because of strict dimensional control, the interchangeable type linear guideways are a wise choice for customers when rails do not need to be matched for an axis. The model number of the WE series identifies the size, type, accuracy class, preload class, etc.

WE Series

Four-Row Wide Rail

(1) Non-interchangeable type

WE W 27 C C E 2 R 1600 E ZA P II + KK+RC

- WE Series
- Block Type
  W : Flange Type
  H : Square Type
- Model size
  17, 21, 27, 35, 50
- Load Type
  C : Heavy Load
- Block Mounting Type
  A : Mounting From Top
  C : Top or Bottom
- E: Special Block
  None: Standard Block
- No. of Blocks per Rail
- Rail Mounting Type
  R : Mounting From Top
  T : Bottom
- Rail Length (mm)
- E: Special Rail
  None: Standard rail
- Preload Code: Z0, ZA, ZB
- Precision Code:
  C, H, P, SP, UP
- NO. of Rail per Axis set [1]
- Dust Protection[2]
- RC:Reinforced Cap

Note: 1. The roman numerals are used to express the number of matched rails used in one axis. When a single rail is used in an axis, no symbol is indicated.
2. No symbol indicates standard protection (end seal and bottom seal).
ZZ : End seal, bottom seal and scraper
KK: Double seals, bottom seal and scraper.
DD: Double seals and bottom seal

(2) Interchangeable type

- **Model Number of WE Block**

WE W 27 C C E ZA P + KK

- WE Series
- Block Type
  W : Flange Type
  H : Square Type
- Model size
  17, 21, 27, 35, 50
- Load Type
  C : Heavy Load
- Block Mounting Type
  A : Mounting From Top
  C : Top or Bottom
- E: Special Block
  None: Standard block
- Preload Code : Z0, ZA
- Precision Code : C, H, P
- Dust Protection[2]

- **Model Number of WE Rail**

WE R 27 R 1600 E P + RC

- WE Series
- Interchangeable Rail
- Model size
  17, 21, 27, 35, 50
- Rail Mounting Type
  R : Mounting From Top
  T : Bottom
- Rail Length (mm)
- E : Special Rail,
  None : Standard Rail
- Precision Code : C, H, P
- RC : Reinforced Cap

2-3-4 Types

(1) Block types

HIWIN offers two types of linear guideways, flange and square types.

Table 2-3-1 **Block Types**

Type	Model	Shape	Height (mm)	Rail Length (mm)	Main Applications
Square	WEH-CA 17, 21	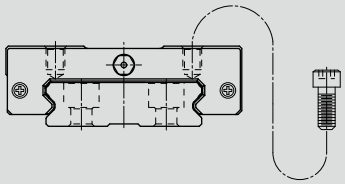	17 ↓ 21	100 ↓ 4000	Automation devices High-speed transportation equipment Precision measuring equipment Semiconductor manufacturing equipment Blow Moulding machines Single Axis Robot-Robotics Single Axis Equipment with High Anti-rolling Requirement
Square	WEH-CA 27, 35, 50	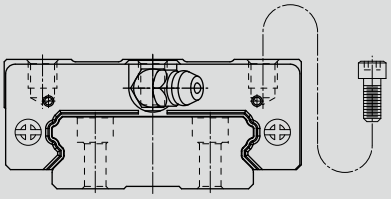	27 ↓ 50	100 ↓ 4000	
Flange	WEW-CC	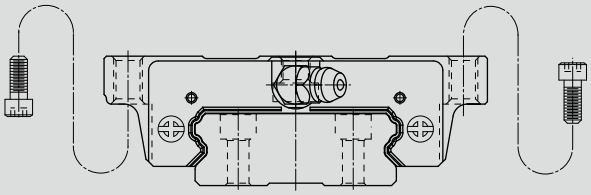	17 ↓ 50	100 ↓ 4000	

(2) Rail types

Besides the standard top mounting type, HIWIN also offers bottom mounting type rails.

Table 2-3-2 **Rail Types**

Mounting from Top	Mounting from Bottom
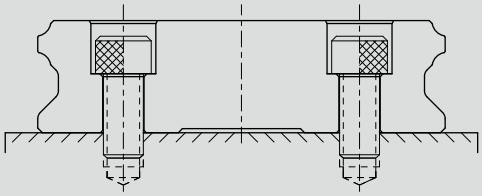	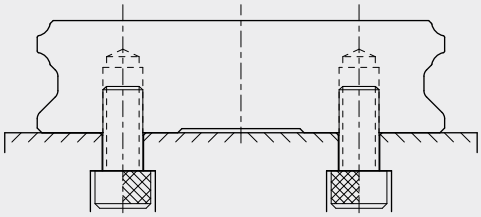

2-3-5 Accuracy

The accuracy of the WE series can be classified into 5 classes: normal(C), high(H), precision(P), super precision(SP), and ultra precision(UP). Choose the class by referencing the accuracy of selected equipment.

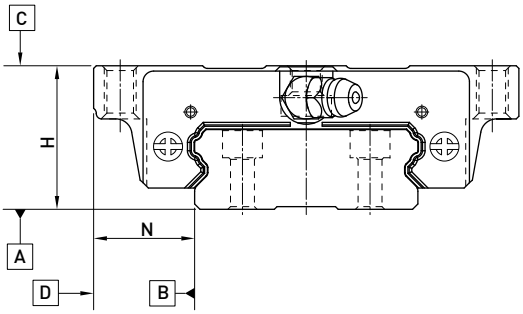

(1) Accuracy of non-interchangeable guideways

Table 2-3-3 **Accuracy Standards** Unit: mm

Type	WE - 17, 21					WE - 27, 35				
Accuracy Classes	Normal (C)	High (H)	Precision (P)	Super Precision (SP)	Ultra Precision (UP)	Normal (C)	High (H)	Precision (P)	Super Precision (SP)	Ultra Precision (UP)
Dimensional tolerance of height H	±0.1	±0.03	0 - 0.03	0 - 0.015	0 - 0.008	± 0.1	± 0.04	0 - 0.04	0 - 0.02	0 - 0.01
Dimensional tolerance of width N	±0.1	±0.03	0 - 0.03	0 - 0.015	0 - 0.008	± 0.1	± 0.04	0 - 0.04	0 - 0.02	0 - 0.01
Variation of height H	0.02	0.01	0.006	0.004	0.003	0.02	0.015	0.007	0.005	0.003
Variation of width N	0.02	0.01	0.006	0.004	0.003	0.03	0.015	0.007	0.005	0.003
Running parallelism of block surface C to surface A	See Table 2-3-5									
Running parallelism of block surface D to surface B	See Table 2-3-5									

Type	WE - 50				
Accuracy Classes	Normal (C)	High (H)	Precision (P)	Super Precision (SP)	Ultra Precision (UP)
Dimensional tolerance of height H	±0.1	±0.05	0 - 0.05	0 - 0.03	0 - 0.02
Dimensional tolerance of width N	±0.1	±0.05	0 - 0.05	0 - 0.03	0 - 0.02
Variation of height H	0.03	0.015	0.007	0.005	0.003
Variation of width N	0.03	0.02	0.01	0.007	0.005
Running parallelism of block surface C to surface A	See Table 2-3-5				
Running parallelism of block surface D to surface B	See Table 2-3-5				

(2) Accuracy of interchangeable guideways

Table 2-3-4 **Accuracy Standards** Unit: mm

Item	WE - 17, 21			WE - 27, 35			WE - 50		
Accuracy Classes	Normal (C)	High (H)	Precision (P)	Normal (C)	High (H)	Precision (P)	Normal (C)	High (H)	Precision (P)
Dimensional tolerance of height H	± 0.1	± 0.03	± 0.015	± 0.1	± 0.04	± 0.02	± 0.1	± 0.05	± 0.025
Dimensional tolerance of width N	± 0.1	± 0.03	± 0.015	± 0.1	± 0.04	± 0.02	± 0.1	± 0.05	± 0.025
Variation of height H	0.02	0.01	0.006	0.02	0.015	0.007	0.03	0.015	0.007
Variation of width N	0.02	0.01	0.006	0.03	0.015	0.007	0.03	0.02	0.01
Running parallelism of block surface C to surface A	See Table 2-3-5								
Running parallelism of block surface D to surface B	See Table 2-3-5								

(3) Accuracy of running parallelism

Table 2-3-5 **Accuracy of Running Parallelism**

Rail Length (mm)	Accuracy (μm)				
	C	H	P	SP	UP
~ 100	12	7	3	2	2
100 ~ 200	14	9	4	2	2
200 ~ 300	15	10	5	3	2
300 ~ 500	17	12	6	3	2
500 ~ 700	20	13	7	4	2
700 ~ 900	22	15	8	5	3
900 ~ 1,100	24	16	9	6	3
1,100 ~ 1,500	26	18	11	7	4
1,500 ~ 1,900	28	20	13	8	4
1,900 ~ 2,500	31	22	15	10	5
2,500 ~ 3,100	33	25	18	11	6
3,100 ~ 3,600	36	27	20	14	7
3,600 ~ 4,000	37	28	21	15	7

2-3-6 Preload

(1) Definition

A preload can be applied to each guideway. Generally, a linear motion guideway has a negative clearance between the groove and balls in order to improve stiffness and maintain high precision. The figure shows that adding a preload can improve stiffness of the linear guideway.

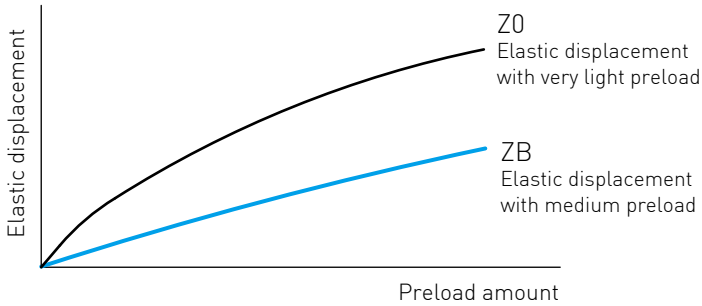

(2) Preload classes

HIWIN offers three standard preloads for various applications and conditions.

Table 2-3-6 **Preload Classes**

Class	Code	Preload	Condition
Very Light Preload	Z0	0~ 0.02C	Certain load direction,low impact, low precision requirement
Light Preload	ZA	0.03C~0.05C	low load and high precision requirement
Medium Preload	ZB	0.06C~ 0.08C	High rigidity requirement, with vibration and impact

Class	Interchangeable Guideway	Non-Interchangeable Guideway
Preload classes	Z0, ZA	Z0, ZA, ZB

Note: The "C" in the preload column denotes basic dynamic load rating.

(3) Stiffness performance

Stiffness depends on preload. The following table shows stiffness value of each size.

Table 2-3-7 **Radial stiffness for WE Series**

Load type	Series / Size	Stiffness (N/μm)		
		Z0	ZA	ZB
Heavy load	WE 17C	130	342	469
	WE 21C	153	368	497
	WE 27C	188	476	651
	WE 35C	285	607	804
	WE 50C	429	758	1042

2-3-7 Lubrication

(1) Grease

Grease nipple

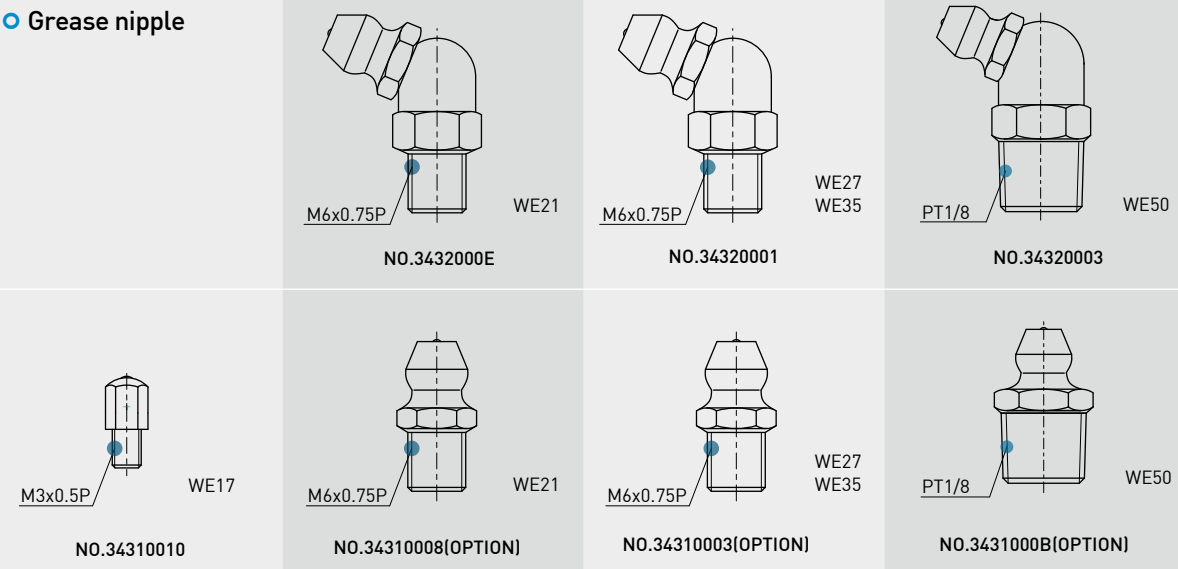

Mounting location

The standard location of the grease fitting is at both ends of the block, the nipple may be mounted in the side or top of the block. For lateral installation, we recommend that the nipple be mounted to the non-reference side, otherwise please contact us. When lubricating from above, in the recess for the O-ring, a smaller, preformed recess can be found. Preheat the 0.8 mm diameter metal tip. Carefully open the small recess with the metal tip and pierce through it. Insert a round sealing ring into the recess. (The round sealing ring is not supplied with the block) Do not open the small recess with a drill bit this may introduce the danger of contamination. It is possible to carry out the lubrication by using the oil-piping joint.

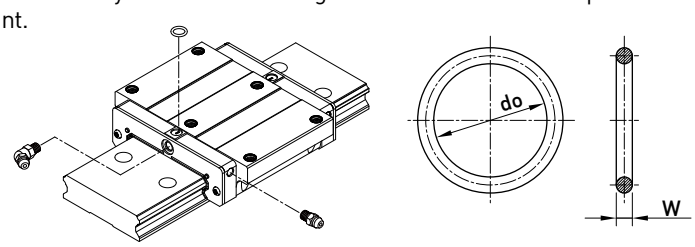

O Ring

Table 2-3-8 **O-Ring size and max. permissible depth for piercing**

Size	O-Ring		Lube hole at top: max. permissible depth for piercing
	do(mm)	W (mm)	T_{max} (mm)
WE 21	2.5 ± 0.15	1.5 ± 0.15	4.2
WE 27	4.5 ± 0.15	1.5 ± 0.15	5.8
WE 35	4.5 ± 0.15	1.5 ± 0.15	7.6
WE 50	4.5 ± 0.15	1.5 ± 0.15	11.8

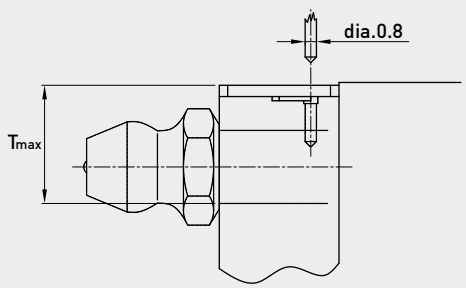

The oil amount for a block filled with grease

Table 2-3-9 **The oil amount for a block filled with grease**

Size	Heavy Load (cm³)	Size	Heavy Load (cm³)
WE 17	1.4	WE 35	9.5
WE 21	2.4	WE 50	20
WE 27	3.6		

Frequency of replenishment

Check the grease every 100 km, or every 3-6 months.

(2) Oil

The recommended viscosity of oil is about 30~150cSt. If you need to use oil-type lubrication, please inform us.

Types of oil piping joint

LF-76

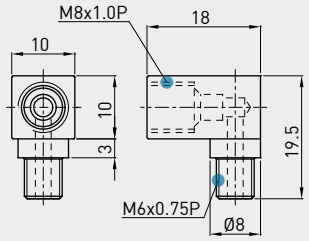

WE27
WE35

NO.970002A1

LF-78

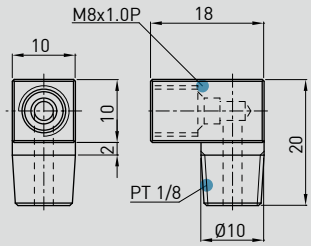

WE50

NO.970006A1

LF-86

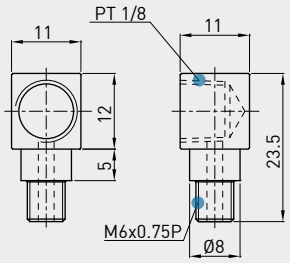

WE27
WE35

NO.970004A1

LF-88

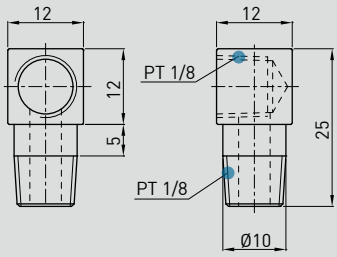

WE50

NO.970008A1

SF-76

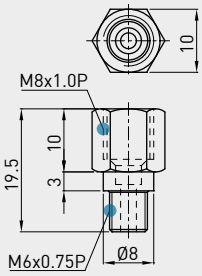

WE27
WE35

NO.970001A1

SF-78

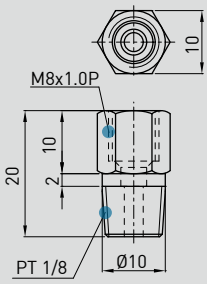

WE50

NO.970005A1

SF-86

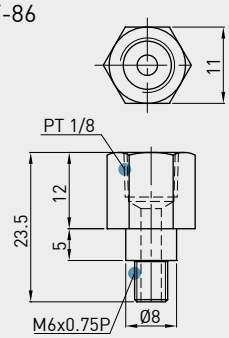

WE27
WE35

NO.970003A1

SF-88

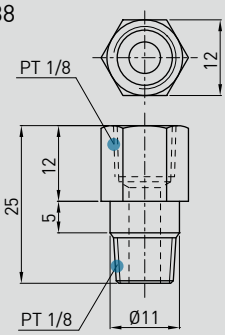

WE50

NO.970007A1

WE Series

Four-Row Wide Rail

Oil feeding rate

Table 2-3-10 **oil feed rate**

Size	feed rate (cm^3/hr)
WE 17	0.15
WE 21	0.2
WE 27	0.2
WE 35	0.3
WE 50	0.4

2-3-8 Dust Protection Equipment

(1) Codes of equipment

If the following equipment is needed, please indicate the code followed by the model number.

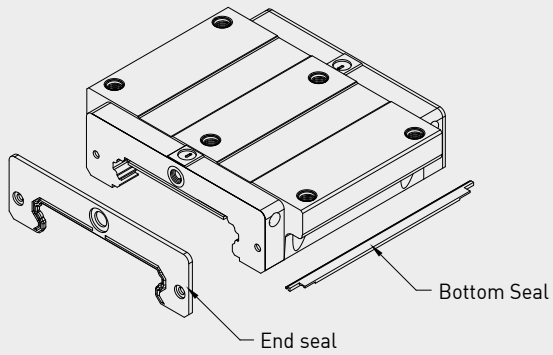

No symbol: Standard Protection (End seal + Bottom seal)

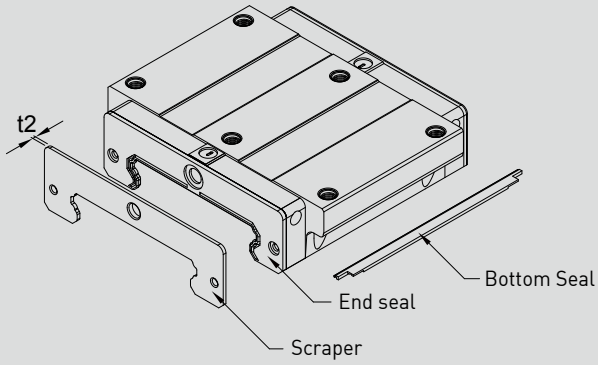

ZZ(End seal + Bottom seal + Scraper)

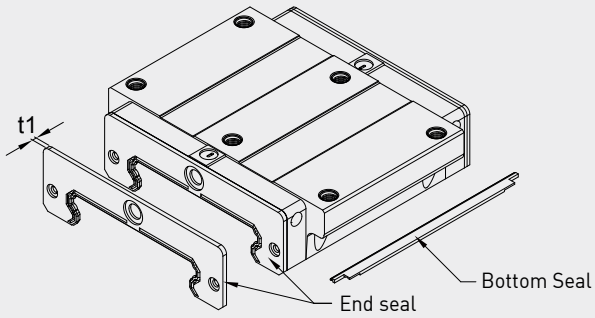

DD (Double seals + Bottom Seal)

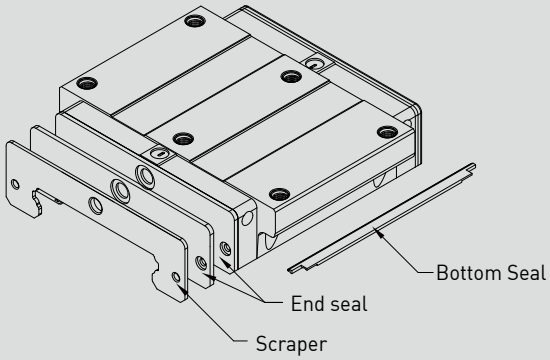

KK (Double seals + Bottom Seal + Scraper)

(2) End seal and bottom seal

Protects against contaminants entering the block. Reduces potential for groove damage resulting in a reduction of life ratings.

(3) Double seals

Removes foreign matter from the rail preventing contaminants from entering the block.

Table 2-3-11 **Dimensions of end seal**

Size	Thickness (t1) (mm)	Size	Thickness (t1) (mm)
WE 17 ES	1.6	WE 35 ES	2
WE 21 ES	2	WE 50 ES	2.5
WE 27 ES	2		

(4) Scraper

Clears larger contaminants, such as weld spatter and metal cuttings, from the rail. Metal scraper protects end seals from excessive damage.

Table 2-3-12 **Dimensions of Scraper**

Size	Thickness (t2) (mm)	Size	Thickness (t2) (mm)
WE 17 SC	1	WE 35 SC	1.5
WE 21 SC	1	WE 50 SC	1
WE 27 SC	1		

(5) Bolt caps for rail mounting holes

Rail mounting hole caps prevent foreign matter from accumulating in the mounting holes. Caps are included with the rail package.

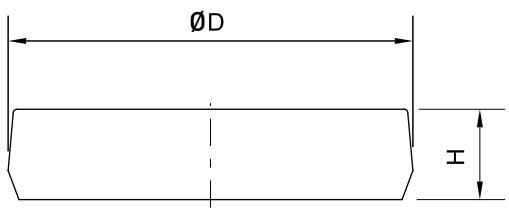

Table 2-3-13 **Dimensions of Bolt Caps for Rail Mounting Holes**

Rail size	Bolt size	Diameter(D) (mm)	Thickness(H) (mm)
WER17R	M4	7.65	1.1
WER21R	M4	7.65	1.1
WER27R	M4	7.65	1.1
WER35R	M6	11.15	2.5
WER50R	M8	14.20	3.5

WE Series

Four-Row Wide Rail

(6) Dimensions of block equipped with the dustproof parts

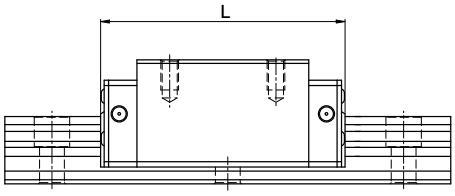

Table 2-3-14 **Overall block length**

unit: mm

Size	Overall block length (L)			
	SS	ZZ	DD	KK
WE17C	50.6 (51.5)	52.6 (55.6)	53.8 (55.0)	55.8 (58.8)
WE21C	59.0 (63.0)	61.0 (67.0)	63.0 (67.0)	65.0 (71.0)
WE27C	72.8 (77.2)	74.8 (80.8)	76.8 (81.2)	78.8 (84.8)
WE35C	102.6 (106.6)	105.6 (111.6)	106.6 (110.6)	109.6 (115.6)
WE50C	140.0 (141.6)	142.0 (146.2)	145.0 (146.6)	147.0 (151.2)

Note : The marking of "( )" denotes the maximum block length with screws, lips of end seals, etc.

2-3-9 Friction

The maximum value of resistance per end seal are as shown in the table.

Table 2-3-15 **Seal Resistance**

Size	Resistance N (kgf)	Size	Resistance N (kgf)
WE 17	1.18 (0.12)	WE 35	3.92 (0.4)
WE 21	1.96 (0.2)	WE 50	3.92 (0.4)
WE 27	2.94 (0.3)		

Note:1kgf=9.81N

2-3-10 Mounting Surface Accuracy Tolerance

Because of the circular-arc contact design, the WE linear guideway can withstand surface-error installation and deliver smooth linear motion. When the mounting surface meets the accuracy requirements of the installation, the high accuracy and rigidity of the guideway will be obtained without any difficulty. For faster installation and smoother movement, HIWIN offers a preload with normal clearance because of its ability to absorb higher deviations in mounting surface inaccuracies.

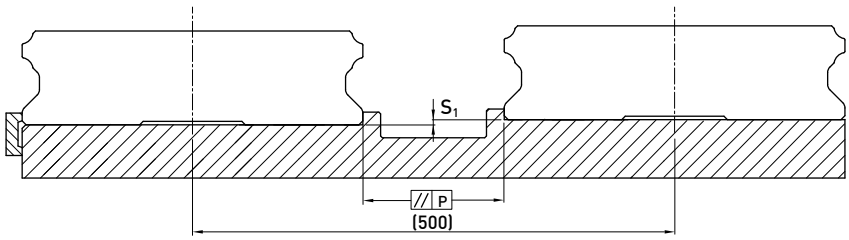

Table 2-3-16 **Max. Parallelism Tolerance (P)**

unit: μm

Size	Preload classes			Size	Preload classes		
	Z0	ZA	ZB		Z0	ZA	ZB
WE 17	20	15	9	WE 35	30	22	20
WE 21	25	18	9	WE 50	40	30	27
WE 27	25	20	13				

Table 2-3-17 **Max. Tolerance of Reference Surface Height (S_1)**

unit: μm

Size	Preload classes			Size	Preload classes		
	Z0	ZA	ZB		Z0	ZA	ZB
WE 17	65	20	-	WE 35	130	85	70
WE 21	130	85	45	WE 50	170	110	90
WE 27	130	85	45				

Note : Permissible value is proportional to the axial distance.

2-3-11 Cautions for Installation

(1) Shoulder heights and chamfers

Improper shoulder heights and fillets of mounting surfaces will cause a deviation in accuracy and the interference with the rail or block. As long as the recommended shoulder heights and fillets are followed, installation inaccuracies should be eliminated.

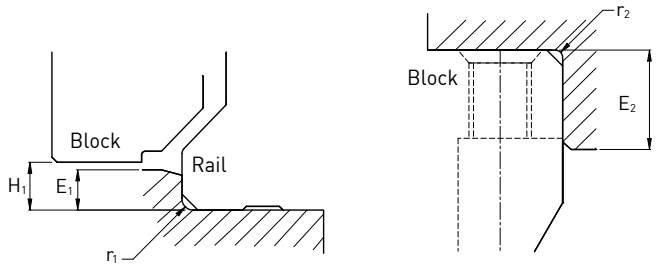

Table 2-3-18 **Shoulder Heights and Chamfers**

unit: mm

Size	Max. radius of fillets r_1 (mm)	Max. radius of fillets r_2 (mm)	Shoulder height beside the rail E_1 (mm)	Shoulder height beside the block E_2 (mm)	Clearance under block H_1 (mm)
WE 17	0.4	0.4	2.0	4.0	2.5
WE 21	0.4	0.4	2.5	5.0	3.0
WE 27	0.5	0.4	3.0	7.0	4.0
WE 35	0.5	0.5	3.5	10.0	4.0
WE 50	0.8	0.8	6.0	10.0	7.5

(2) Tightening Torque of Bolts for Installation

Improperly tightened mounting bolts will seriously affect the accuracy of linear guide installations. The following tightening torques for different sizes of bolts are recommended.

Table 2-3-19 **Tightening Torque**

Size	Bolt size	Torque N-cm(kgf-cm)		
		Iron	Casting	Aluminum
WE 17	M4×0.7P×12L	392(40)	274(28)	206(21)
WE 21	M4×0.7P×12L	392(40)	274(28)	206(21)
WE 27	M4×0.7P×16L	392(40)	274(28)	206(21)
WE 35	M6×1P×20L	1373(140)	921(94)	686(70)
WE 50	M8×1.25P×25L	3041(310)	2010(205)	1470(150)

Note: 1 kgf = 9.81 N

WE Series

Four-Row Wide Rail

2-3-12 Standard and Maximum Lengths of Rail

HIWIN offers a number of standard rail lengths. Standard rail lengths feature end mounting hole placements set to predetermined values (E). For non-standard rail lengths, be sure to specify the E-value to be no greater than 1/2 the pitch (P) dimension. An E-value greater than this will result in unstable rail ends.

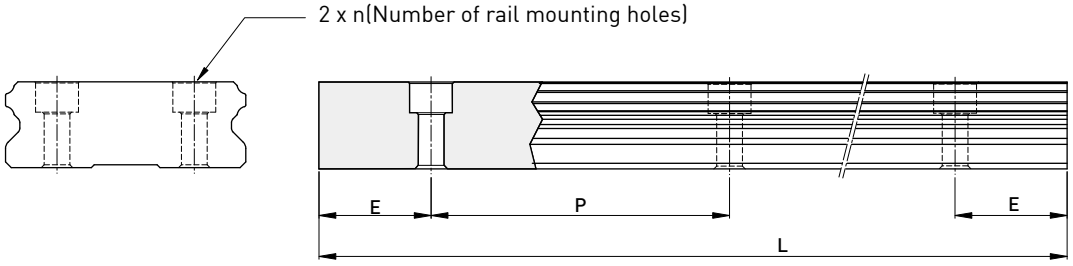

$$L = (n-1) \times P + 2 \times E \qquad \text{Eq.2.3}$$

L : Total length of rail (mm)
n : Number of mounting holes
P : Distance between any two holes (mm)
E : Distance from the center of the last hole to the edge (mm)

Table 2-3-20 **Rail Standard Length and Max. Length**

unit: mm

Item	WER17	WER21	WER27	WER35	WER50
Standard Length L(n)	110 (3)	130 (3)	220 (4)	280 (4)	280 (4)
	190 (5)	230 (5)	280 (5)	440 (6)	440 (6)
	310 (8)	380 (8)	340 (6)	600 (8)	600 (8)
	390 (10)	480 (10)	460 (8)	760 (10)	760 (10)
	470 (12)	580 (12)	640 (11)	1000 (13)	1,000 (13)
	550 (14)	780 (16)	820 (14)	1,640 (21)	1,640 (21)
	-	-	1,000 (17)	2,040 (26)	2,040 (26)
	-	-	1,240 (21)	2,520 (32)	2,520 (32)
	-	-	1,600 (27)	3,000 (38)	3,000 (38)
Pitch (P)	40	50	60	80	80
Distance to End (E_s)	15	15	20	20	20
Max. Standard Length	3,990 (100)	3,980 (80)	4,000 (67)	3,960 (50)	3,960 (50)
Max. Length	4,000	4,000	4,000	4,000	4,000

Note : 1. Tolerance of E value for standard rail is 0.5~-0.5 mm. Tolerance of E value for jointed rail is 0~-0.3 mm.
2. Maximum standard length means the max. rail length with standard E value on both sides.
3. If different E value is needed, please contact HIWIN.

2-3-13 Dimensions for HIWIN WE Series

(1) WEH-CA

WEH17CA
WEH21CA

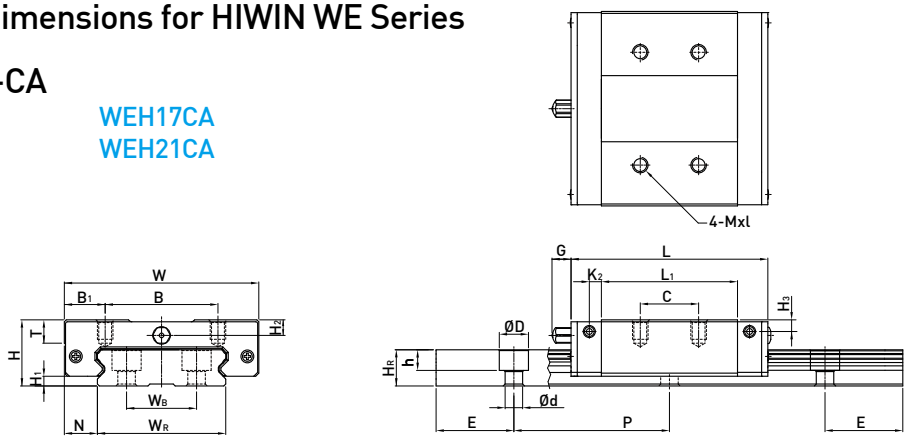

WEH27CA
WEH35CA
WEH50CA

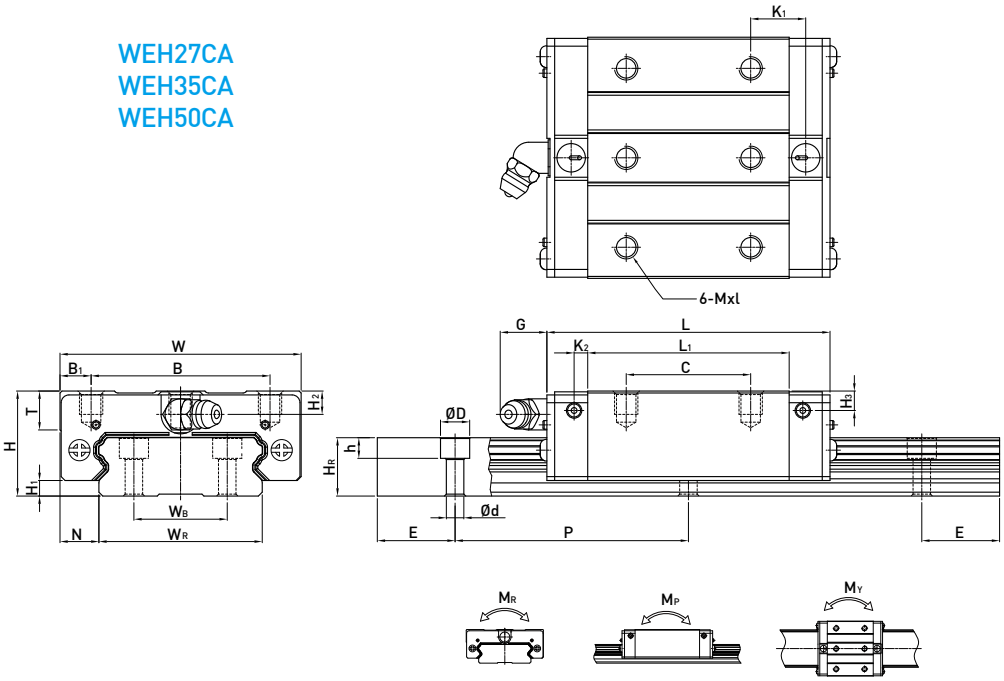

Model No.	Dimensions of Assembly (mm)			Dimensions of Block (mm)													Dimensions of Rail (mm)								Mounting Bolt for Rail	Basic Dynamic Load Rating	Basic Static Load Rating	Static Rated Moment			Weight	
	H	H_1	N	W	B	B_1	C	L_1	L	K_1	K_2	G	Mxl	T	H_2	H_3	W_R	W_B	H_R	D	h	d	P	E	(mm)	C(kN)	C_0 (kN)	M_R kN-m	M_P kN-m	M_Y kN-m	Block kg	Rail kg/m
WEH17CA	17	2.5	8.5	50	29	10.5	15	35	50.6	-	3.1	4.9	M4x5	6	4	3	33	18	9.3	7.5	5.3	4.5	40	15	M4x12	5.23	9.64	0.15	0.062	0.062	0.12	2.2
WEH21CA	21	3	8.5	54	31	11.5	19	41.7	59	14.68	3.65	12	M5x6	8	4.5	4.2	37	22	11	7.5	5.3	4.5	50	15	M4x12	7.21	13.7	0.23	0.10	0.10	0.20	3.0
WEH27CA	27	4	10	62	46	8	32	51.8	72.8	14.15	3.5	12	M6x6	10	6	5	42	24	15	7.5	5.3	4.5	60	20	M4x16	12.4	21.6	0.42	0.17	0.17	0.35	4.7
WEH35CA	35	4	15.5	100	76	12	50	77.6	102.6	18.35	5.25	12	M8x8	13	8	6.5	69	40	19	11	9	7	80	20	M6x20	29.8	49.4	1.48	0.67	0.67	1.1	9.7
WEH50CA	50	7.5	20	130	100	15	65	112	140	28.05	6	12.9	M10x15	19.5	12	10.5	90	60	24	14	12	9	80	20	M8x25	61.52	97.1	4.03	1.96	1.96	3.16	15.5

Note : 1 kgf = 9.81 N

WE Series

Four-Row Wide Rail

(2) WEW-CC

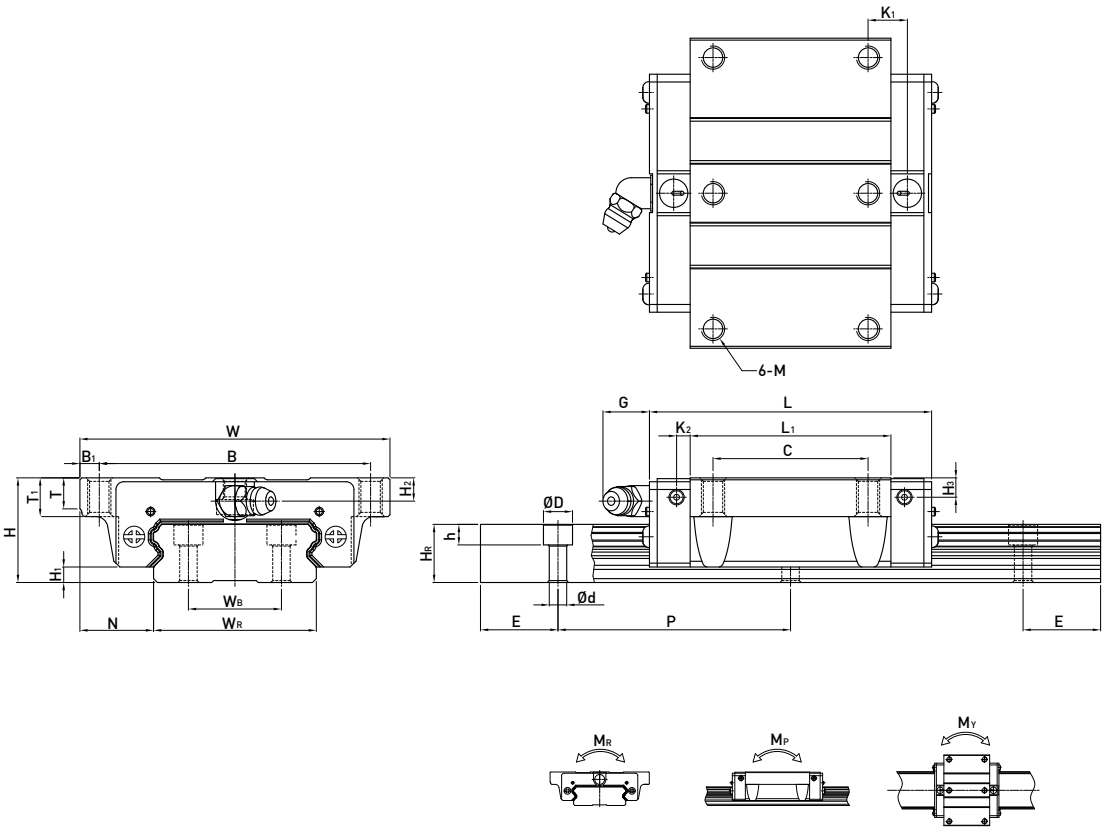

Model No.	Dimensions of Assembly (mm)			Dimensions of Block (mm)														Dimensions of Rail (mm)								Mounting Bolt for Rail	Basic Dynamic Load Rating	Basic Static Load Rating	Static Rated Moment			Weight	
	H	H_1	N	W	B	B_1	C	L_1	L	K_1	K_2	G	M	T	T_1	H_2	H_3	W_R	W_B	H_R	D	h	d	P	E	(mm)	C(kN)	C_0 (kN)	M_R kN-m	M_P kN-m	M_Y kN-m	Block kg	Rail kg/m
WEW17CC	17	2.5	13.5	60	53	3.5	26	35	50.6	-	3.1	4.9	M4	5.3	6	4	3	33	18	9.3	7.5	5.3	4.5	40	15	M4x12	5.23	9.64	0.15	0.062	0.062	0.13	2.2
WEW21CC	21	3	15.5	68	60	4	29	41.7	59	9.68	3.65	12	M5	7.3	8	4.5	4.2	37	22	11	7.5	5.3	4.5	50	15	M4x12	7.21	13.7	0.23	0.10	0.10	0.23	3.0
WEW27CC	27	4	19	80	70	5	40	51.8	72.8	10.15	3.5	12	M6	8	10	6	5	42	24	15	7.5	5.3	4.5	60	20	M4x16	12.4	21.6	0.42	0.17	0.17	0.43	4.7
WEW35CC	35	4	25.5	120	107	6.5	60	77.6	102.6	13.35	5.25	12	M8	11.2	14	8	6.5	69	40	19	11	9	7	80	20	M6x20	29.8	49.4	1.48	0.67	0.67	1.26	9.7
WEW50CC	50	7.5	36	162	144	9	80	112	140	20.55	6	12.9	M10	14	18	12	10.5	90	60	24	14	12	9	80	20	M8x25	61.52	97.1	4.03	1.96	1.96	3.71	15.5

Note : 1 kgf = 9.81 N

(3) Dimensions for WER-T (rail mounting from bottom)

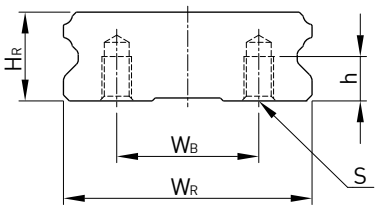

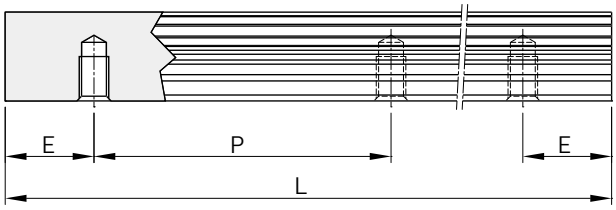

Model No.	Dimensions of Rail (mm)							Weight
	W_R	W_B	H_R	S	h	P	E	(kg/m)
WER17T	33	18	9.3	M4 x 0.7P	6	40	15	2.3
WER21T	37	22	11	M4 x 0.7P	7	50	15	3.1
WER27T	42	24	15	M5 x 0.8P	7.5	60	20	4.8
WER35T	69	40	19	M6 x 1P	12	80	20	9.9
WER50T	90	60	24	M8 x 1.25P	15	80	20	15.9

MG Series

Miniature Type

2-4 MG Series - Miniature Linear Guideway

2-4-1 Features of MGN Series

Design features of narrow type miniature guideways- MGN:
1. Tiny and light weight, suitable for miniature equipment.
2. Gothic arch contact design can sustain loads from all directions and offer high rigidity and high accuracy.
3. Specification with ball retainers would avoid ball falling when the blocks are removed from rails.
4. Interchangeable types are available in certain sizes and precision grades.

2-4-2 Construction of MGN Series

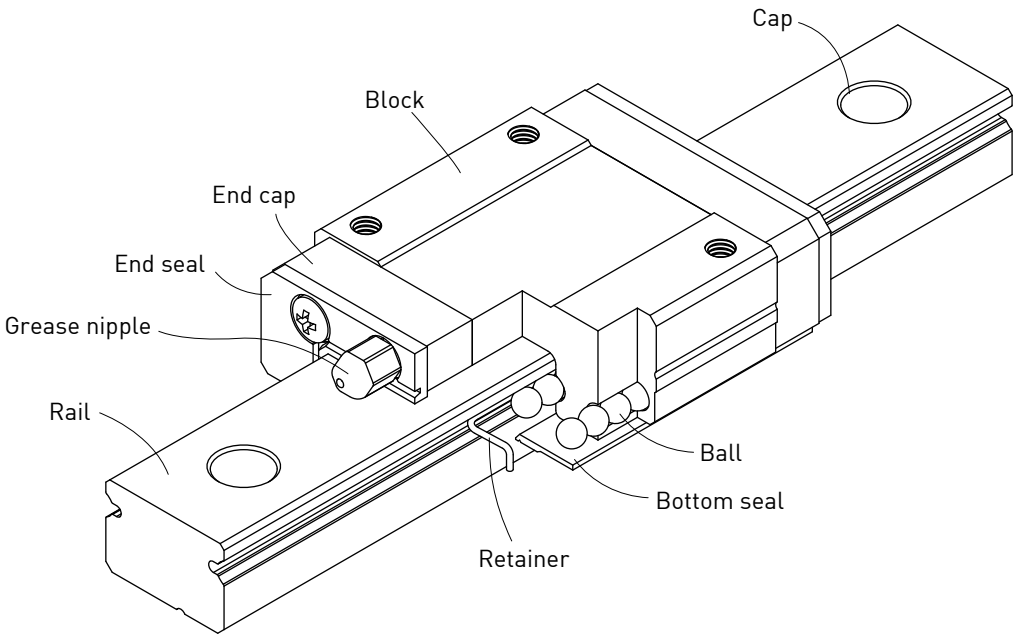

- Rolling circulation system: Block, rail, ball, end cap and retainer (except size 2, 3)
- Lubrication system: Grease nipple is available for MGN15, lubricated by grease gun.
  MGN7, 9, 12 are lubricated by the hole at the side of the end cap.
- Dust protection system: End seal (except size 2), bottom seal (optional size 9,12,15), cap (size12,15)

2-4-3 Features of MGW Series

Design features of wide type miniature guideways- MGW:
1. The enlarged width design increases the capacity of moment loading.
2. Gothic arch contact design has high rigidity characteristic in all directions.
3. Specification with ball retainers would avoid ball falling when the blocks are removed from rails.
4. Interchangeable types are available in certain sizes and precision grades.

2-4-4 Construction of MGW Series

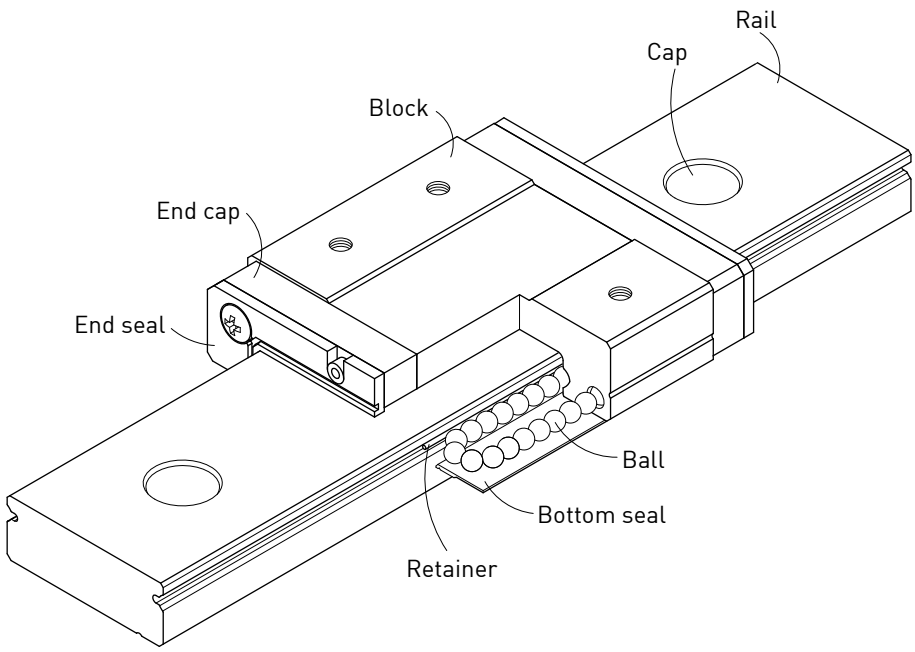

- Rolling circulation system: Block, rail, ball, end cap and retainer (except size 2)
- Lubrication system: Grease nipple is available for MGW14, 15, lubricated by grease gun.
  MGW3, 7, 9, 12 are lubricated by the hole at the side of the end cap.
- Dust protection system: End seal (except size 2), bottom seal (optional size 9,12,14,15), cap (size12,14,15)

MG Series

Miniature Type

2-4-5 Features of MGN-O Series

Design features of narrow type miniature guideways- MGN-O:

1. Reduce 20% weight of block by using resin in the recirculation unit. The copmact size and light weight is suitable for miniturized machinery.
2. Gothic arch contact design can sustain loads from all directions and offer high rigidity and high accuracy.
3. Interchangeable types are available in certain precision grades.
4. The design of resin recirculation unit which is able to eliminate the collision with the metal block.
5. Integrated design for recirculation system.

2-4-6 Construction of MGN-O Series

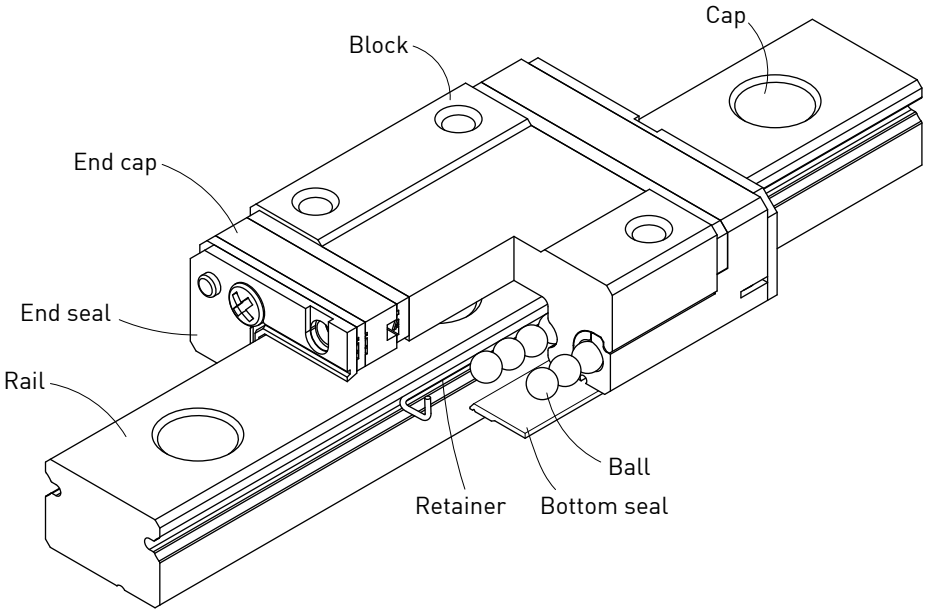

- Rolling circulation system: Block, rail, ball, end cap and retainer
- Lubrication system: Grease nipple is available for MGN15-O, lubricated by grease gun. MGN5-O, MGN7-O, MGN9-O, MGN12-O are lubricated by the hole at the side of the end cap.
- Dust protection system: End seal, bottom seal (optional size 9,12,15), cap (size12,15)

2-4-7 Features of MGW-O Series

Design features of wide type miniature guideways- MGW-O:

1. The enlarged width design increases the capacity of moment loading.
2. Gothic arch contact design has high rigidity characteristic in all directions.
3. Steel balls are held by a miniature retainer to keep balls from falling out, even when the blocks are removed from the rail.
4. Integrated design for recirculation system, which reduce 20% weight of block by using resin in the recirculation unit.

2-4-8 Construction of MGW-O Series

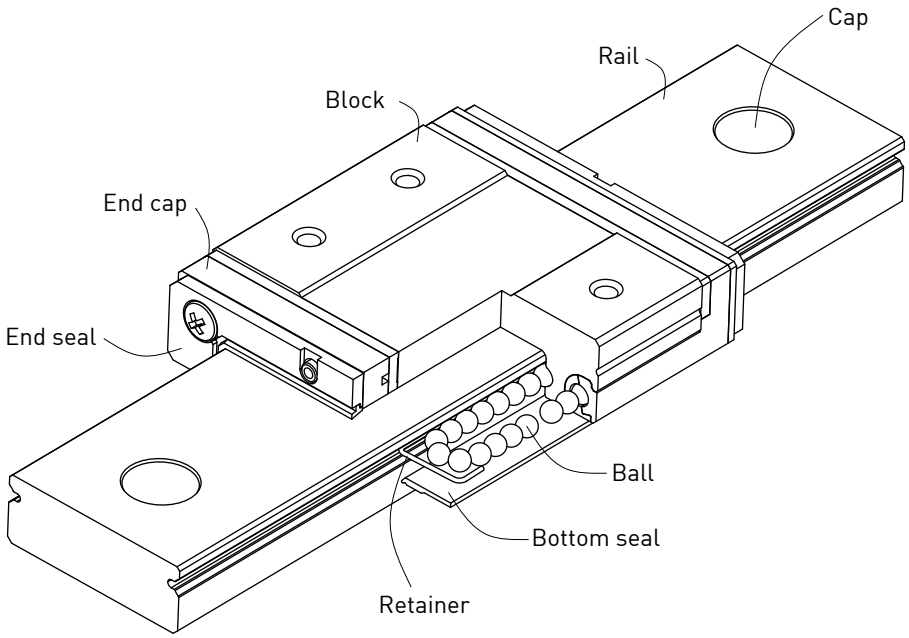

- Rolling circulation system: Block, rail, ball, end cap and retainer
- Lubrication system: Grease nipple is available for MGW15-O, lubricated by grease gun. MGW5-O, MGW7-O, MGW9-O, MGW12-O are lubricated by the hole at the side of the end cap.
- Dust protection system: End seal, bottom seal (optional size 9, 12, 15), cap (size12, 15)

2-4-9 Application

MGN/MGW series can be used in various applications, such as semiconductor equipment, PCB /IC equipment, medical, robotics, measuring equipment, automation equipment, and other miniature sliding machinery.

2-4-10 Model Number of MG Series

MG Series linear guideway can be classified into non-interchangeable and interchangeable types, which are the same size.The interchangeable type is more convenient due to replaceable rails; however, the precision is less than non-interchangeable type. With strict dimension and quality control, the interchangeable type linear guideways are a suitable choice for customers when rails don't need to be paired. The model number contains information for the size, type, accuracy, preload, and so on.

MG Series

Miniature Type

(1) Non-interchangeable type

MGN 12 C E 2 R1600 E Z1 P M II + SS/U/EL+RC/-O

- MGN / MGW Series
- Model Size : 2, 3, 5, 7, 9, 12, 14, 15
- Block Type C : Standard H : Long
- E : Special Block None : Standard Block
- No. of Blocks per Rail
- Rail Length (mm)
- E : Special Rail None : Standard Rail
- Preload Code : ZF, Z0, Z1
- Precision Code : C, H, P
- Material[3]: No symbol, M, HC, NC
- No. of Rails per Axis[1]
- End Seal Option[6]
- Bottom Seal Option[2]
- EL : Auxiliary Lubrication Module[7]
- RC:Reinforced Cap (Optional For MGN12,15)
- O:Outer Recirculation Module[4, 5]

Note: 1. Symbol for No. of rails used on the same plane.
No symbol indicates single rail in a axis.
2. The bottom seal is available for MGN & MGW 9, 12, 14, 15.
3. No symbol: Carbon Steel
M: Stainless Steel
HC: Carbon Steel+Hard Chrome Treatment
NC: Carbon Steel+hicoating Treatment
4. MG5 is only supplied with outer recirculation module.
5. MG2, MG3 and MGW14 are only supplied without outer recirculation module.
6. The end seal is optional for MGN3, and it's available for SS symbol.
7. The available size for EL auxiliary lubrication module are , MGN7,9,12 & MGW9,12.

(2) Interchangeable type

Interchangeable Block

MGN 12 C E Z1 P M + U/EL-O

- MGN / MGW Series
- Model Size[3] : 5, 7, 9, 12, 14, 15
- Block Type C : Standard H : Long
- E: Special Block None: Standard Block
- Preload Code : ZF, Z0, Z1
- Precision Code : C, H, P
- No symbol: Carbon Steel M: Stainless Steel
- Bottom Seal Option[1]
- EL : Auxiliary Lubrication Module[5]
- O:Outer Recirculation Module[2, 4]

Note: 1. The bottom seal is available for MGN & MGW 9, 12, 14, 15.
2. MG5 is only supplied with outer recirculation module.
3. No interchangeable offer of MG2 and MG3.
4. MGW14 is only supplied without outer recirculation module.
5. The available size for EL auxiliary lubrication module are , MGN7,9,12 & MGW9,12.

Interchangeable Rail

MGN R 12 R1000 E P M + RC

- MGN / MGW Series
- Interchangeable Rail
- Model Size : 5, 7, 9, 12, 14, 15
- Rail Length (mm)
- Rail Special Option
- Precision Code : C, H, P
- Material: No symbol (Carbon Steel) M (Stainless Steel) HC (Carbon Steel+Hard Chrome Treatment) NC (Carbon Steel+hicoating)
- RC:Reinforced Cap (Optional For MGN12,15)

2-4-11 Types

(1) Block types

HIWIN offers two types of linear guideways, flange and square types.

Table 2-4-1 **Block Types**

Type	Model	Shape	Height (mm)	Rail Length (mm)	Main Applications
Square	MGN-C MGN-H	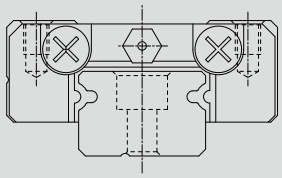	3.2 ↓ 16	30 ↓ 2000	○ Printer ○ Robotics ○ Precision measure equipment ○ Semiconductor equipment
Flange	MGW-C MGW-H	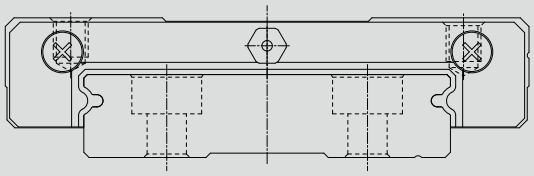	4 ↓ 16	40 ↓ 2000	

*Please refer to the chapter 2-4-14 for the dimensional detail.

(2) Rail types

HIWIN offers standard top mounting and bottom mounting type.

Table 2-4-2 **Rail Types**

Mounting from Top	Mounting from bottom (MGN2, MGN3)
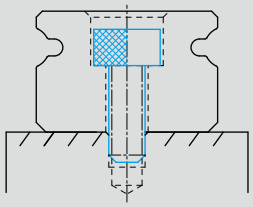	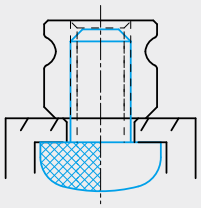

MG Series

Miniature Type

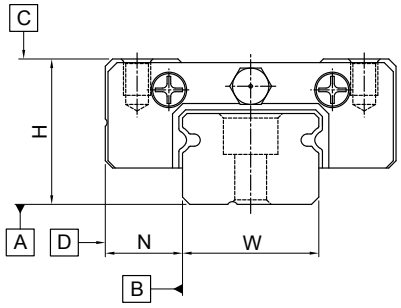

2-4-12 Accuracy Classes

The accuracy of MGN/MGW series can be classified into three classes: normal (C), high (H), precision (P). Choices for different accuracy classes are available according to various requirements.

(1) Accuracy of non-interchangeable guideways

Table 2-4-3 **Accuracy Standard of Non-interchangeable Type**

Unit: mm

Accuracy Classes	Normal (C)	High (H)	Precision (P)
Dimensional tolerance of height H	± 0.04	± 0.02	± 0.01
Dimensional tolerance of width N	± 0.04	± 0.025	± 0.015
Pair Variation of height H	0.03	0.015	0.007
Pair Variation of width N (Master Rail)	0.03	0.02	0.01
Running parallelism of block surface C to surface A	See Table 2-4-5		
Running parallelism of block surface D to surface B	See Table 2-4-5		

(2) Accuracy of interchangeable guideways

Table 2-4-4 **Accuracy Standard of Interchangeable Type**

Unit: mm

Accuracy Classes		Normal (C)	High (H)	Precision (P)
Dimensional tolerance of height H		± 0.04	± 0.02	± 0.01
Dimensional tolerance of width N		± 0.04	± 0.025	± 0.015
One Set	Pair Variation of height H	0.03	0.015	0.007
	Pair Variation of width N	0.03	0.02	0.01
Pair Variation of width N (Master Rail)		0.07	0.04	0.02
Running parallelism of block surface C to surface A		See Table 2-4-5		
Running parallelism of block surface D to surface B		See Table 2-4-5		

(3) Accuracy of running parallelism

The running parallelism C to A and D to B are related to the rail length.

Table 2-4-5 **Accuracy of Running Parallelism**

Rail Length (mm)	Accuracy (μm) (C)	(H)	(P)	Rail Length (mm)	Accuracy (μm) (C)	(H)	(P)
~ 50	12	6	2	1,000 ~ 1,200	25	18	11
50 ~ 80	13	7	3	1,200 ~ 1,300	25	18	11
80 ~ 125	14	8	3.5	1,300 ~ 1,400	26	19	12
125 ~ 200	15	9	4	1,400 ~ 1,500	27	19	12
200 ~ 250	16	10	5	1,500 ~ 1,600	28	20	13
250 ~ 315	17	11	5	1,600 ~ 1,700	29	20	14
315 ~ 400	18	11	6	1,700 ~ 1,800	30	21	14
400 ~ 500	19	12	6	1,800 ~ 1,900	30	21	15
500 ~ 630	20	13	7	1,900 ~ 2,000	31	22	15
630 ~ 800	22	14	8	2,000 ~	31	22	16
800 ~ 1,000	23	16	9				

2-4-13 Preload

MGN/MGW series provides three different preload levels for various applications.

Table 2-4-6 **Preload Classes**

Class	Code	Preload	Accuracy
Light Clearance	ZF	Clearance 4~10μm	C
Very Light Preload	Z0	Clearance 0~3μm	C~P
Light Preload	Z1	0.02C	C~P

Note: "C" in column preload means basic dynamic load rating.

Stiffness performance

Stiffness depends on preload. The following table shows stiffness value of each size.

Table 2-4-7 **Radial stiffness for MG Series**

Load type	Series / Size	Stiffness (N/μm)		Series / Size	Stiffness (N/μm)	
		Z0	Z1		Z0	Z1
Standard	MGN5C-O	20	61	MGW5C-O	32	85
	MGN7C	26	73	MGW7C	44	112
	MGN9C	38	102	MGW9C	62	140
	MGN12C	44	105	MGW12C	72	148
	MGN15C	58	126	MGW15C	85	154
Long	MGN5H-O	26	79	-	-	-
	MGN7H	42	122	MGW7H	64	168
	MGN9H	56	153	MGW9H	81	190
	MGN12H	70	175	MGW12H	102	217
	MGN15H	89	202	MGW15H	122	235

2-4-14 Dust Proof Accessories

End seals on both sides of the block can prevent dust from entering the block and maintain the accuracy and service life of a linear guideway. End seals for MGN3 are optional, customers can order it by adding the mark "+SS" followed by the model number. For other size of MG series, end seals are standard accessories. Bottom seals are fixed under the skirt portion of the block to prevent dust from entering. Customers can order bottom seals by adding the mark "+U" followed by the model number. Sizes 9, 12, 14 and 15 provide bottom seals as an option, but size 2, 3, 5, 7 do not offer the option due to the space limit of H_1. Note that "H_1" would reduced if bottom seals are attached, be aware of possible interference between block and mounting surface.

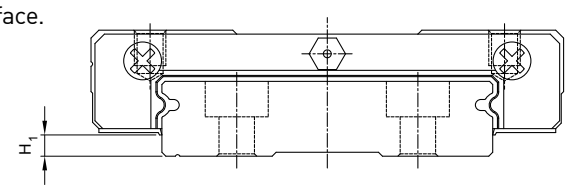

Table 2-4-8

Size	Bottom seal	H_1 mm	Size	Bottom seal	H_1 mm
MGN2	-	-	MGW2	-	-
MGN3	-	-	MGW3	-	-
MGN7	-	-	MGW7	-	-
MGN9	●	1	MGW9	●	1.9
MGN12	●	2	MGW12	●	2.4
-	-	-	MGW14	●	2.4
MGN15	●	3	MGW15	●	2.4
MGN5-O	-	-	MGW5-O	-	-
MGN7-O	-	-	MGW7-O	-	-
MGN9-O	●	1.2	MGW9-O	●	1.95
MGN12-O	●	2	MGW12-O	●	2.45
MGN15-O	●	3	MGW15-O	●	2.45

MG Series

Miniature Type

● **Bolt caps for rail mounting holes**

Rail mounting hole caps prevent foreign matter from accumulating in the mounting holes. Caps are included with the rail package.

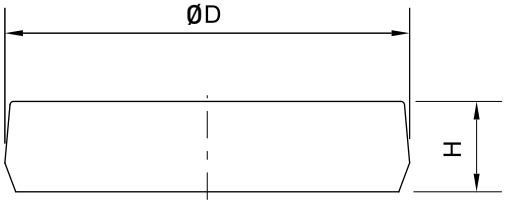

Table 2-4-9 **Dimensions of Bolt Caps for Rail Mounting Holes**

Rail size	Bolt size	Diameter(D) (mm)	Thickness(H) (mm)
MGN12	M3	6.15	1.2
MGN15	M3	6.15	1.2
MGW12	M4	8.15	2.2
MGW14	M4	8.15	2.2
MGW15	M4	8.15	2.2

2-4-15 Mounting Surface Accuracy Tolerance

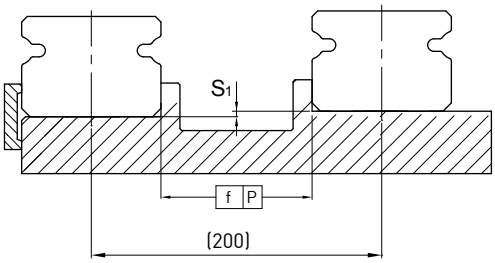

Table 2-4-10 **Max. Parallelism Tolerance (P)**

unit: μm

Size	Preload classes			Size	Preload classes		
	ZF	Z0	Z1		ZF	Z0	Z1
MG2	2	2	2	MG9	4	4	3
MG3	2	2	2	MG12	9	9	5
MG5	2	2	2	MG14	10	10	6
MG7	3	3	3	MG15	10	10	6

Table 2-4-11 **Max. Tolerance of Reference Surface Height (S_1)**

unit: μm

Size	Preload classes			Size	Preload classes		
	ZF	Z0	Z1		ZF	Z0	Z1
MG2	15	15	2	MG9	35	35	6
MG3	15	15	2	MG12	50	50	12
MG5	20	20	2	MG14	60	60	20
MG7	25	25	3	MG15	60	60	20

Table 2-4-12 **Permissible Error of Mounting Surface**

unit: mm

Size	Flatness of the Mounting Surface	Size	Flatness of the Mounting Surface
MG2	0.012/200	MG9	0.035/200
MG3	0.012/200	MG12	0.050/200
MG5	0.015/200	MG14	0.060/200
MG7	0.025/200	MG15	0.060/200

Note: The values above are suitable for preload of ZF/Z0. For preload of Z1 or using two(or more) rails on the same plane, 50% or less of the values above are recommended.

2-4-16 Cautions for Installation

(1) Shoulder heights and fillets

Improper shoulder heights and fillets of mounting surfaces will cause a deviation in accuracy and the interference with the rail or block. As long as the recommended shoulder heights and fillets are followed, installation inaccuracies should be eliminated.

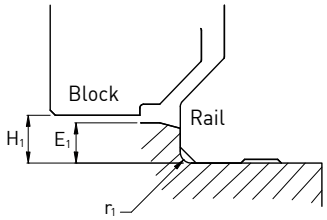

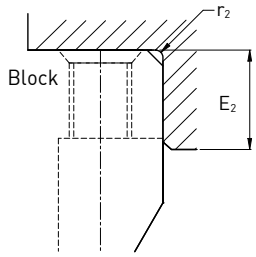

Table 2-4-13 **Shoulder Heights and Fillets**

Size	Max. radius of fillets r_1 (mm)	Max. radius of fillets r_2 (mm)	Shoulder height beside the rail E_1 (mm)	Shoulder height beside the block E_2 (mm)	Clearance under block H_1 (mm)
MGN2	0.1	0.2	0.5	1.5	0.7
MGN3	0.1	0.2	0.6	1.5	1
MGN5	0.1	0.2	1.2	2	1.5
MGN7	0.2	0.2	1.2	3	1.5
MGN9	0.2	0.3	1.7	3	2
MGN12	0.3	0.4	1.7	4	3
MGN15	0.5	0.5	2.5	5	4
MGW2	0.1	0.2	0.6	1.5	1
MGW3	0.1	0.2	0.6	2	1
MGW5	0.1	0.2	1.2	2	1.5
MGW7	0.2	0.2	1.7	3	1.9
MGW9	0.3	0.3	2.5	3	2.9
MGW12	0.4	0.4	3	4	3.4
MGW14	0.4	0.4	3	5	3.5
MGW15	0.4	0.8	3	5	3.4

(2) Tightening torque of bolts for installation

Improper tightening of rail mounting bolts will seriously affect the accuracy of the linear guideway. The following table lists the recommended tightening torque for the specific bolt sizes.

Table 2-4-14 **Tightening Torque**

Size	Bolt size	Torque, N-cm (kgf-cm)		
		Iron	Casting	Aluminum
MGN5	M2×0.4P×6L	57(5.9)	39.2(4)	29.4(3)
MGN7	M2×0.4P×6L	57(5.9)	39.2(4)	29.4(3)
MGN9	M3×0.5P×8L	186(19)	127(13)	98(10)
MGN12	M3×0.5P×8L	186(19)	127(13)	98(10)
MGN15	M3×0.5P×10L	186(19)	127(13)	98(10)
MGW2	M1.6×0.35P×4.4L	27.6(2.8)	19(1.94)	14.2(1.45)
MGW3	M2×0.4P×6L	57(5.9)	39.2(4)	29.4(3)
MGW5	M2.5×0.45P×7L	118(12)	78.4(8)	58.8(6)
MGW7	M3×0.5P×6L	186(19)	127(13)	98(10)
MGW9	M3×0.5P×8L	186(19)	127(13)	98(10)
MGW12	M4×0.7P×8L	392(40)	274(28)	206(21)
MGW14	M4×0.7P×10L	392(40)	274(28)	206(21)
MGW15	M4×0.7P×10L	392(40)	274(28)	206(21)

Note : 1 kgf = 9.81 N

MG Series

Miniature Type

2-4-17 Standard and Maximum Lengths of Rail

HIWIN offers standard lengths of rail for fast shipping. For non-standard rail lengths, it's recommended that the E value is no greater than 1/2 of the pitch(P) to prevent instability at the end of the rail, and the E value should be no less than E-min to avoid a broken mounting hole.

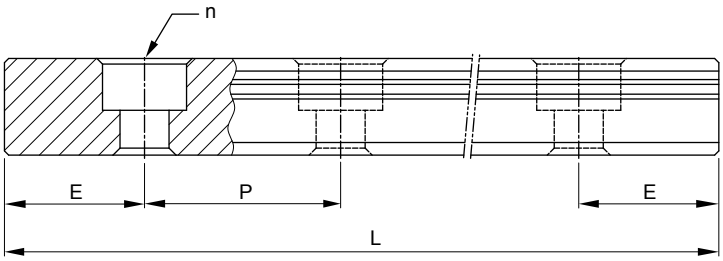

$$L = (n-1) \times P + 2 \times E \quad \text{Eq.2.4}$$

L : Total length of rail (mm)
n : Number of mounting holes
P : Distance between any two holes (mm)
E : Distance from the center of the last hole to the edge (mm)

Table 2-4-15 unit: mm

Item	MGNR2	MGNR3	MGNR5	MGNR7	MGNR9	MGNR12	MGNR15	MGWR2	MGWR3	MGWR5	MGWR7	MGWR9	MGWR12	MGWR14	MGWR15
Standard Length L (n)	32(4)	30(3)	40(3)	40(3)	55(3)	70(3)	70(2)	40(4)	40(3)	50(3)	50(2)	80(3)	110(3)	110(3)	110(3)
	40(5)	40(4)	55(4)	55(4)	75(4)	95(4)	110(3)	60(6)	55(4)	70(4)	80(3)	110(4)	150(4)	150(4)	150(4)
	56(7)	50(5)	70(5)	70(5)	95(5)	120(5)	150(4)	70(7)	70(5)	90(5)	110(4)	140(5)	190(5)	190(5)	190(5)
	80(10)	60(6)	100(7)	85(6)	115(6)	145(6)	190(5)	80(8)	100(7)	110(6)	140(5)	170(6)	230(6)	230(6)	230(6)
	104(13)	80(8)	130(9)	100(7)	135(7)	170(7)	230(6)	100(10)	130(9)	130(7)	170(6)	200(7)	270(7)	270(7)	270(7)
		100(10)	160(11)	130(9)	155(8)	195(8)	270(7)		160(11)	150(8)	200(7)	230(8)	310(8)	310(8)	310(8)
					175(9)	220(9)	310(8)			170(9)	260(9)	260(9)	350(9)	350(9)	350(9)
					195(10)	245(10)	350(9)				290(10)	290(10)	390(10)	390(10)	390(10)
					275(14)	270(11)	390(10)					350(14)	430(11)	430(11)	430(11)
					375(19)	320(13)	430(11)					500(19)	510(13)	510(13)	510(13)
						370(15)	470(12)					710(24)	590(15)	590(15)	590(15)
						470(19)	550(14)					860(29)	750(19)	750(19)	750(19)
						570(23)	670(17)						910(23)	910(23)	910(23)
						695(28)	870(22)						1070(27)	1070(27)	1070(27)
Pitch (P)	8	10	15	15	20	25	40	10	15	20	30	30	40	40	40
Distance to End (E_s)	4	5	5	5	7.5	10	15	5	5	5	10	10	15	15	15
Max. Standard Length	248(31)	250(25)	250(17)	595(40)	1195(60)	1995(80)	1990(50)	250(25)	250(17)	250(13)	590(20)	1970(66)	1990(50)	1790(45)	1990(50)
Max. Length	250[6]	250[6]	250[6]	600	1200[7]	2000	2000	250[6]	250[6]	250[6]	600[8]	2000	2000	1800[5]	2000

Note:
1. Tolerance of E value for standard rail is 0.5~-0.5 mm. Tolerance of E value for jointed rail is 0~-0.3 mm.
2. Maximum standard length indicates the max. rail length with standard E value on both sides.
3. Fixing screws for MGN5's mounting holes are appended.
4. If smaller E value is needed, please contact HIWIN.
5. MGWR14 is only supplied with carbon steel.
6. MGNR2, MGWR2, MGNR3, MGWR3, MGNR5, MGWR5 are only supplied with stainless steel.
7. MGNR9 of stainless steel is supplied with the maximum length of 1200mm; MGNR9 of carbon steel is supplied with the maximum length of 1000mm.
8. MGWR7 of stainless steel is supplied with the maximum length of 600mm; MGWR7 of carbon steel is supplied with the maximum length of 2000mm .

2-4-18 EL Auxiliary Lubrication Module

The EL Auxiliary Lubrication Module is an environment friendly lubrication system that can extend the maintenance life of HIWIN and guideways up to 10,000 km. The module is installed on either end of a guideway block and provides extended lubrication through a no-drip encapsulated material for a cleaner environmental solution.

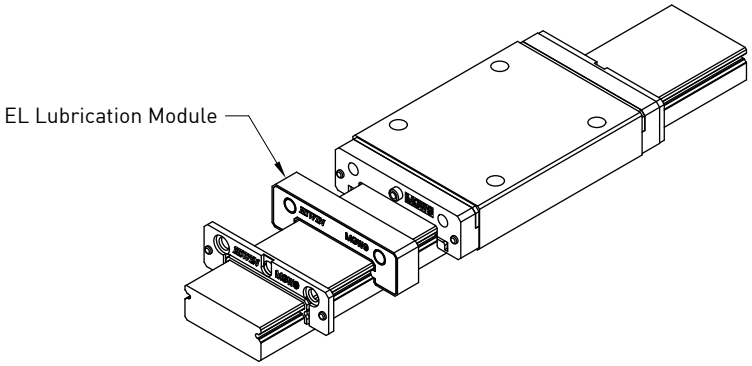

(1) Feature

1. Extend maintenance period up to10,000km
2. Contained lubrication fluid prevents spills
3. Direct lubrication in ball rolling raceway.
4. Compatible with most HIWIN guideways.
5. Conform to cleanroom class 1000 regulation.

Notes：1. Service life will vary from application environment, lubrication conditions, and assembly accuracy.
2. Not for use in high heat conditions greater than 50˚C ,and if lower than 25˚ C please contact HIWIN.
3. Standard parts must be pregreased with HIWIN G05. If there is no pregreasing, the maintenance mileage will be shortened.

(2) Applications

Broadly applicable in automation, conveying equipment, Industrial machine, Semi-conductor, and inspection machine.

(3) Lubrication Capability

- High speed life testing with light load

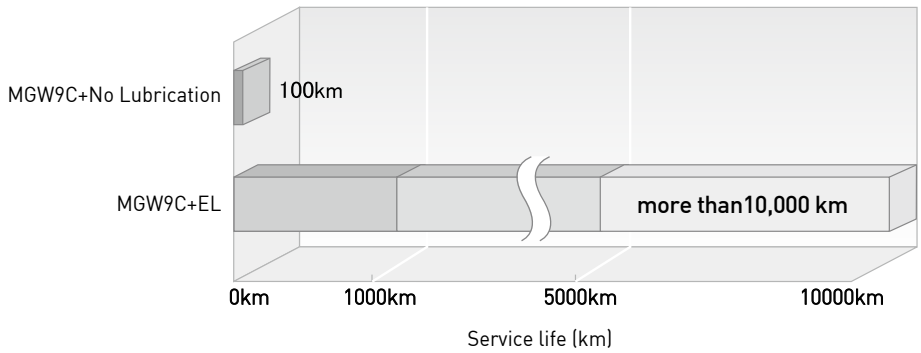

Test Specification	MGW9C1R1000Z0CM+EL
Velocity	5 m/s
Acceleration	50 m/s^2
Applied Load	0.2 kgf
Stroke	850 mm
Lubrication	Lithium Soap Grease+EL
Distance travel	10,000 km

MG Series

Miniature Type

(4) Dimension Table for EL Type

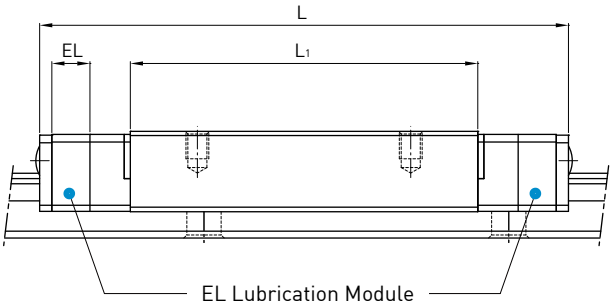

unit : mm

Model No.	Lubrication device (R_1)	Block length (L_1)	Total length (L)
MGN7C	3.5	13.5	29.5
MGN7H		21.8	37.8
MGN9C	5	18.9	38.9
MGN9H		29.9	49.9
MGN12C	5	21.7	44.7
MGN12H		32.4	55.4
MGW9C	5	27.5	49.3
MGW9H		38.5	60.7
MGW12C	5	31.3	56.1
MGW12H		45.6	70.4

2-4-19 Dimensions for MGN/MGW Series

(1) MGN-C / MGN-H

MGN2

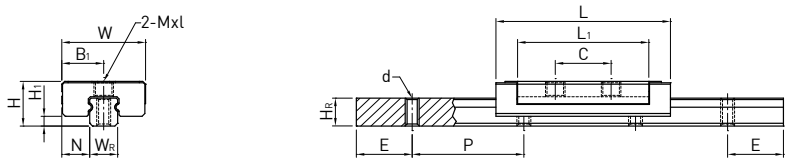

MGN3

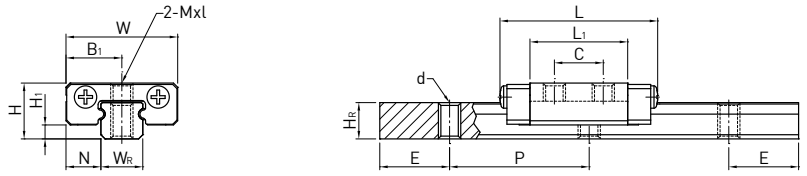

MGN7, MGN9, MGN12

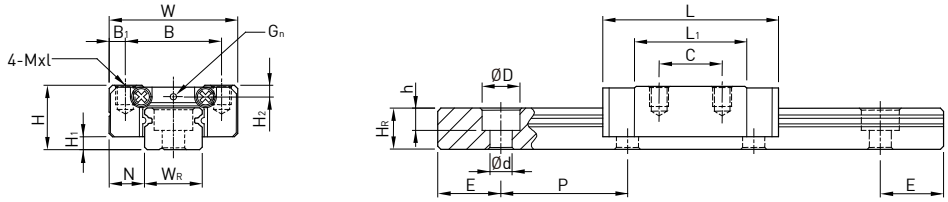

MGN15

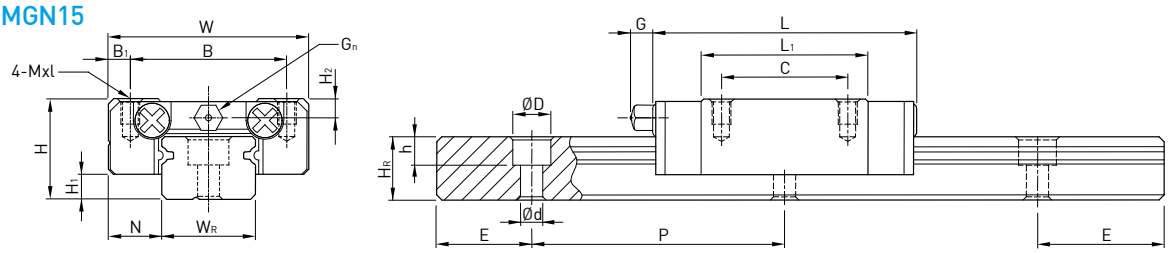

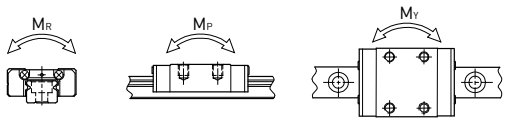

Model No.	Dimensions of Assembly (mm)			Dimensions of Block (mm)										Dimensions of Rail (mm)							Mounting Bolt for Rail	Basic Dynamic Load Rating	Basic Static Load Rating	Static Rated Moment			Weight	
	H	H_1	N	W	B	B_1	C	L_1	L	G	G_n	Mxl	H_2	W_R	H_R	D	h	d	P	E	(mm)	C(kN)	C_0 (kN)	M_R N-m	M_P N-m	M_Y N-m	Block kg	Rail kg/m
MGN 2C	3.2	0.7	2	6	-	3	4	9.5	12.5	-	-	M1.4 THRU	-	2	2	M1 THRU			8	4	M1	0.22	0.4	0.42	0.63	0.63	0.001	0.03
MGN 3C	4	1	2.5	8	-	4	3.5	7	11.3	-	-	M1.6x1.3	-	3	2.6	M1.6 THRU			10	5	M1.6	0.29	0.44	0.7	0.5	0.5	0.001	0.05
MGN 3H							5.5	11	15.3			M2x1.3										0.39	0.68	1.0	1.3	1.3	0.002	
MGN 7C	8	1.5	5	17	12	2.5	8	13.5	22.5	-	Ø1.2	M2x2.5	1.5	7	4.8	4.2	2.3	2.4	15	5	M2x6	0.98	1.24	4.70	2.84	2.84	0.010	0.22
MGN 7H							13	21.8	30.8													1.37	1.96	7.64	4.80	4.80	0.015	
MGN 9C	10	2	5.5	20	15	2.5	10	18.9	28.9	-	Ø1.4	M3x3	1.8	9	6.5	6	3.5	3.5	20	7.5	M3x8	1.86	2.55	11.76	7.35	7.35	0.016	0.38
MGN 9H							16	29.9	39.9													2.55	4.02	19.60	18.62	18.62	0.026	
MGN 12C	13	3	7.5	27	20	3.5	15	21.7	34.7	-	Ø2	M3x3.5	2.5	12	8	6	4.5	3.5	25	10	M3x8	2.84	3.92	25.48	13.72	13.72	0.034	0.65
MGN 12H							20	32.4	45.4													3.72	5.88	38.22	36.26	36.26	0.054	
MGN 15C	16	4	8.5	32	25	3.5	20	26.7	42.1	4.5	M3	M3x4	3	15	10	6	4.5	3.5	40	15	M3x10	4.61	5.59	45.08	21.56	21.56	0.059	1.06
MGN 15H							25	43.4	58.8													6.37	9.11	73.50	57.82	57.82	0.092	

Note : 1. 1 kgf = 9.81N
2. MG2, MG3 blocks should not be removed from the rail. If removing the blocks is necessary, the blocks shoud be kept on the block inserts.

(2) MGW-C / MGW-H

MGW2

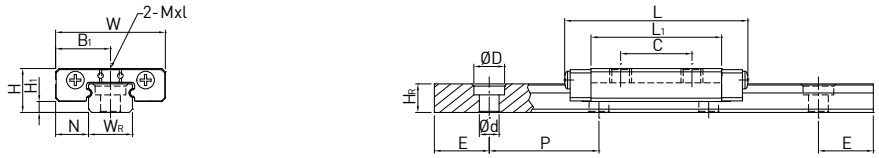

MGW3

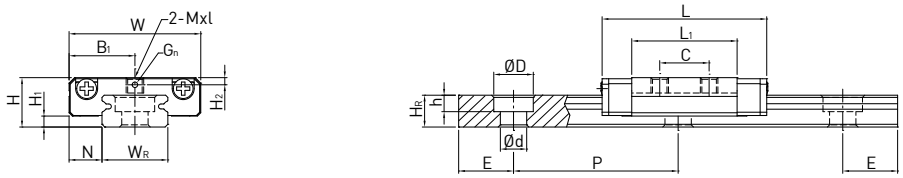

MGW7, MGW9, MGW12

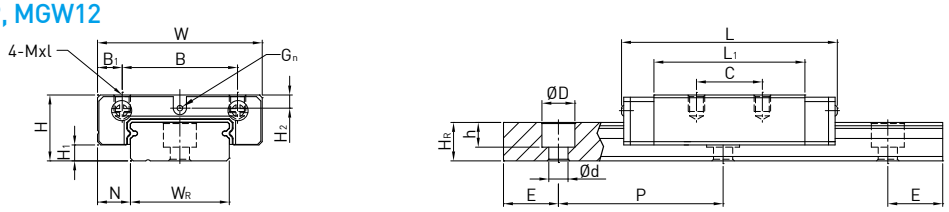

MGW14

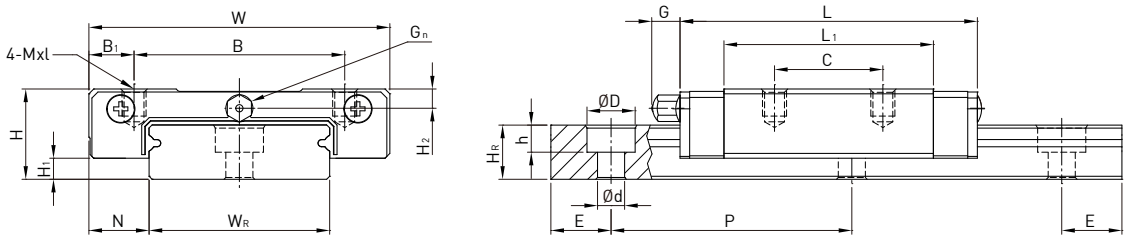

MGW15

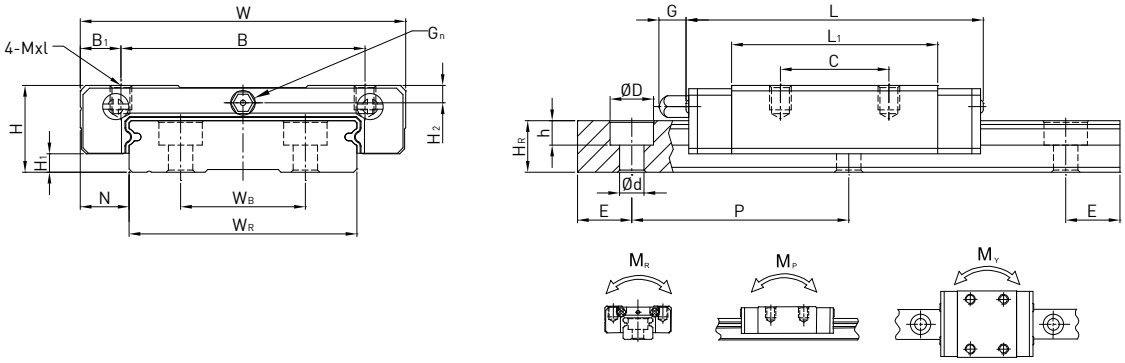

Model No.	Dimensions of Assembly (mm)			Dimensions of Block (mm)										Dimensions of Rail (mm)								Mounting Bolt for Rail	Basic Dynamic Load Rating	Basic Static Load Rating	Static Rated Moment			Weight	
	H	H_1	N	W	B	B_1	C	L_1	L	G	G_n	Mxl	H_2	W_R	W_B	H_R	D	h	d	P	E	(mm)	C(kN)	C_0 (kN)	M_R N-m	M_P N-m	M_Y N-m	Block kg	Rail kg/m
MGW 2C	4	1	3	10	-	5	6.5	11.9	16.7	-	-	M2x1.3	-	4	-	2.6	2.8	1	1.8	10	5	M1.6	0.41	0.73	1.1	2.2	2.2	0.002	0.07
MGW 3C	4.5	1	3	12	-	6	4.5	9.6	15	-	Ø0.5	M2-THRU	0.65	6	-	2.9	3.6	1.5	2.4	15	5	M2	0.54	0.84	2.3	1.3	1.3	0.003	0.13
MGW 3H							8	14.2	19.6														0.68	1.18	3.3	2.7	2.7	0.004	
MGW 7C	9	1.9	5.5	25	19	3	10	21	31.2	-	Ø1.2	M3x3	1.85	14	-	5.2	6	3.2	3.5	30	10	M3x6	1.37	2.06	15.70	7.14	7.14	0.020	0.51
MGW 7H							19	30.8	41														1.77	3.14	23.45	15.53	15.53	0.029	
MGW 9C	12	2.9	6	30	21	4.5	12	27.5	39.3	-	Ø1.2	M3x3	2.4	18	-	7	6	4.5	3.5	30	10	M3x8	2.75	4.12	40.12	18.96	18.96	0.040	0.91
MGW 9H					23	3.5	24	38.5	50.7														3.43	5.89	54.54	34.00	34.00	0.057	
MGW 12C	14	3.4	8	40	28	6	15	31.3	46.1	-	Ø1.2	M3x3.6	2.8	24	-	8.5	8	4.5	4.5	40	15	M4x8	3.92	5.59	70.34	27.80	27.80	0.071	1.49
MGW 12H							28	45.6	60.4														5.10	8.24	102.70	57.37	57.37	0.103	
MGW 14C	15	3.5	10	50	35	7.5	18	34.8	49.4	4.7	M3	M4x4.5	3.2	30	-	9	8	4.5	4.5	40	15	M4	5.90	8.44	116.96	48.91	48.91	0.110	1.98
MGW 14H							35	53	67.6														7.70	12.33	170.94	102.12	102.12	0.162	
MGW 15C	16	3.4	9	60	45	7.5	20	38	54.8	5.2	M3	M4x4.2	3.2	42	23	9.5	8	4.5	4.5	40	15	M4x10	6.77	9.22	199.34	56.66	56.66	0.143	2.86
MGW 15H							35	57	73.8														8.93	13.38	299.01	122.60	122.60	0.215	

Note : 1. 1 kgf = 9.81N
2. MG2 and MG3 blocks should not be removed from the rail. If removing the blocks is necessary, the blocks shoud be kept on the block inserts.

(3) MGN-C-O / MGN-H-O

MGN5-O

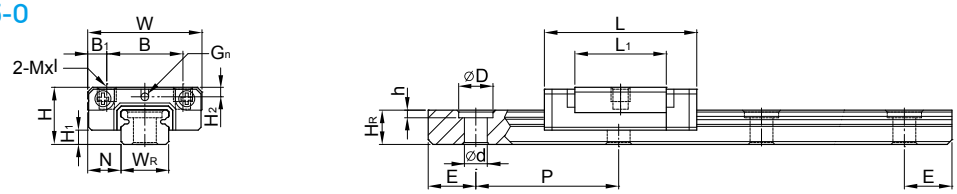

MGN5HL-O

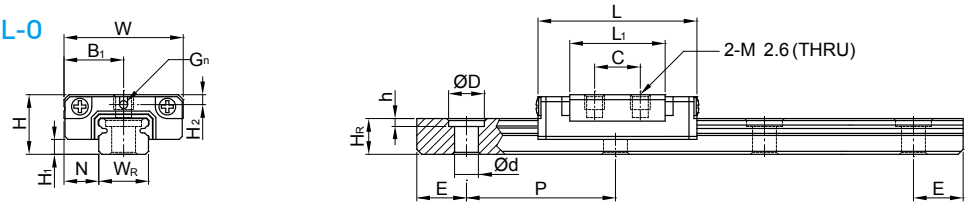

MGN7-O, MGN9-O, MGN12-O

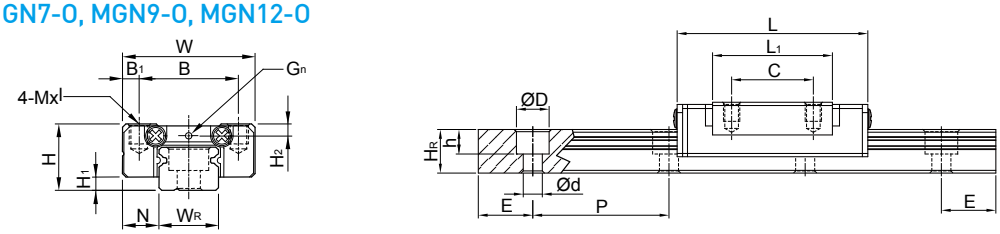

MGN15-O

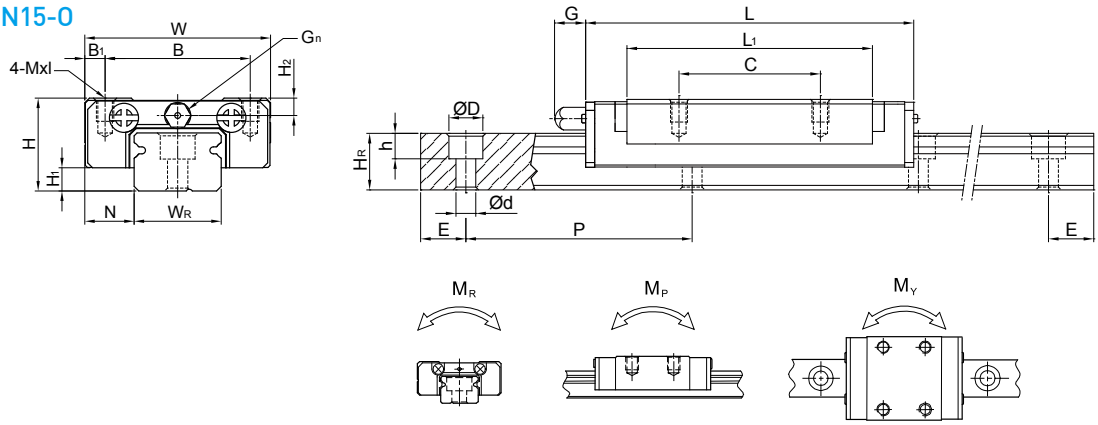

Model No.	Dimensions of Assembly (mm)			Dimensions of Block (mm)										Dimensions of Rail (mm)							Mounting Bolt for Rail	Basic Dynamic Load Rating	Basic Static Load Rating	Static Rated Moment			Weight	
	H	H_1	N	W	B	B_1	C	L_1	L	G	G_n	Mxl	H_2	W_R	H_R	D	h	d	P	E	(mm)	C(kN)	C_0 (kN)	M_R N-m	M_P N-m	M_Y N-m	Block kg	Rail kg/m
MGN 5C-O	6	1.5	3.5	12	8	2	-	9.6	16	-	0.8	M2x1.5	1	5	3.6	3.6	0.8	2.4	15	5	M2x6	0.54	0.84	2	1.3	1.3	0.003	0.15
MGN 5H-O					8	2	-	12.6	19			M2x1.5										0.67	1.08	2.6	2.3	2.3	0.004	
MGN 5HL-O					-	6	7	12.6	19			M2.6-THRU										0.67	1.08	2.6	2.3	2.3	0.004	
MGN7C-O	8	1.5	5	17	12	2.5	8	13.5	22.5	-	Ø1.2	M2×2.5	1.5	7	4.8	4.2	2.3	2.4	15	5	M2x6	0.98	1.24	4.70	2.84	2.84	0.008	0.22
MGN7H-O					12	2.5	13	21.8	30.8			M2×2.5										1.37	1.96	7.64	4.80	4.80	0.012	
MGN 9C-O	10	2.2	5.5	20	15	2.5	10	19.4	30	-	Ø1.4	M3x3	1.8	9	6.5	6	3.5	3.5	20	7.5	M3x8	2.01	2.84	13.05	8.97	8.97	0.012	0.38
MGN9H-O					15	2.5	16	29.3	39.9			M3x3										2.5	3.93	19.71	21.47	21.47	0.02	
MGN 12C-O	13	3	7.5	27	20	3.5	15	22	35	-	Ø2	M3x3.5	2.5	12	8	6	4.5	3.5	25	10	M3x8	2.84	3.92	25.48	13.72	13.72	0.025	0.65
MGN12H-O					20	3.5	20	34.6	47.6			M3x3.5										4.27	5.9	38.4	37.49	37.49	0.047	
MGN 15C-O	16	4	8.5	32	25	3.5	20	26.7	41.3	4.50	M3	M3x4	3	15	10	6	4.5	3.5	40	15	M3x10	4.61	5.59	45.08	21.56	21.56	0.057	1.06
MGN 15H-O					25	3.5	25	43.4	58			M3x4										6.37	9.11	73.5	57.82	57.82	0.088	

Note : 1 kgf = 9.81 N

(4) MGW-C-O / MGW-H-O

MGW5C-O

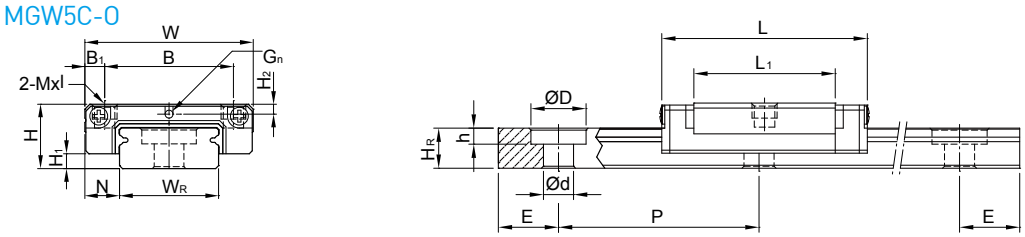

MGW5CL-O

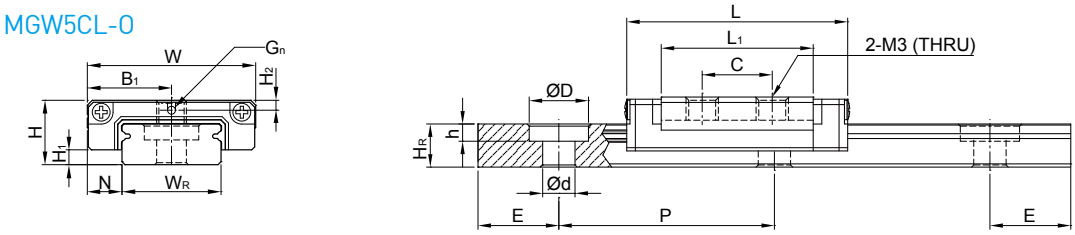

MGW7-O, MGW9-O, MGW12-O

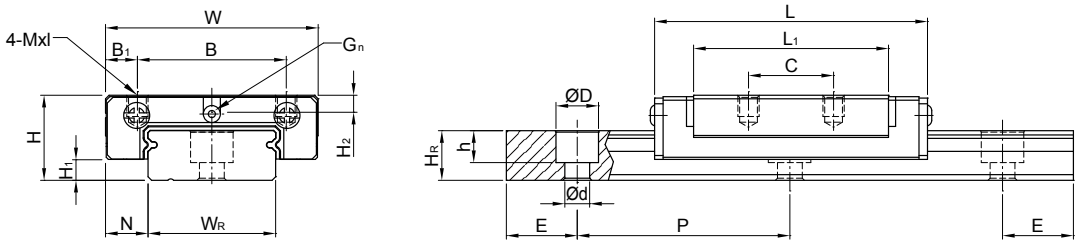

MGW15-O

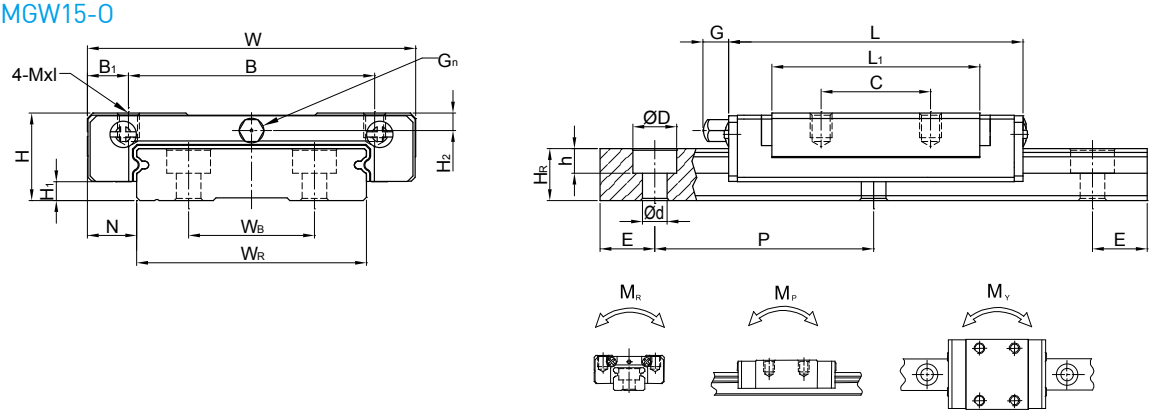

Model No.	Dimensions of Assembly (mm)			Dimensions of Block (mm)										Dimensions of Rail (mm)								Mounting Bolt for Rail	Basic Dynamic Load Rating	Basic Static Load Rating	Static Rated Moment			Weight	
	H	H_1	N	W	B	B_1	C	L_1	L	G	G_n	Mxl	H_2	W_R	W_B	H_R	D	h	d	P	E	(mm)	C(kN)	C_0 (kN)	M_R N-m	M_P N-m	M_Y N-m	Block kg	Rail kg/m
MGW 5C-O	6.5	1.5	3.5	17	13	2	-	14.1	20.5	-	Ø0.8	M2.5x1.5	1	10	-	4	5.5	1.6	3	20	5	M2.5X7	0.68	1.18	5.5	2.7	2.7	0.006	0.34
MGW 5CL-O					-	8.5	6.5	14.1	20.5			M3-THRU											0.68	1.18	5.5	2.7	2.7	0.006	
MGW 7C-O	9	1.9	5.5	25	19	3	10	21	31.2	-	Ø1.2	M3x3	1.85	14	-	5.2	6	3.2	3.5	30	10	M3×6	1.37	2.06	15.70	7.14	7.14	0.018	0.51
MGW 7H-O					19	3	19	30.8	41			M3x3											1.77	3.14	23.45	15.53	15.53	0.026	
MGW 9C-O	12	2.95	6	30	21	4.5	12	27.5	39.7	-	Ø1.2	M3x3	2.65	18	-	7	6	4.5	3.5	30	10	M3x8	2.75	4.12	40.12	18.96	18.96	0.038	0.91
MGW 9H-O					23	3.5	24	38.5	50.7			M3x3											3.43	5.89	54.54	34.00	34.00	0.053	
MGW 12C-O	14	3.45	8	40	28	6	15	31.3	45.1	-	Ø1.2	M3x3.6	2.8	24	-	8.5	8	4.5	4.5	40	15	M4x8	3.92	5.59	70.34	27.8	27.8	0.066	1.49
MGW 12H-O					28	6	28	45.6	59.4			M3x3.6											5.1	8.24	102.7	57.37	57.37	0.093	
MGW 15C-O	16	3.45	9	60	45	7.5	20	38	53.8	5.2	M3	M4×4.2	3.2	42	23	9.5	8	4.5	4.5	40	15	M4×10	6.77	9.22	199.34	56.66	56.66	0.138	2.86
MGW 15H-O					45	7.5	35	57	72.8			M4×4.2											8.93	13.38	299.01	122.60	122.60	0.200	

Note : 1 kgf = 9.81 N

2-5 QH Series – Heavy Load Type Linear Guideway, with SynchMotion® Technology

The development of QH linear guideway is based on a four-row circular-arc contact. The QH series linear guideway with SynchMotion® Technology offers smooth movement, superior lubrication, quieter operation and longer running life. Therefore the QH linear guideway has broad industrial applicability. In the high-tech industry where high speed, low noise, and reduced dust generation is required, the HIWIN-QH series is interchangeable with the HG series.

2-5-1 Features

(1) Low Noise Design

With SynchMotion® technology, rolling elements are interposed between the partitions of SynchMotion® to provide impoved circulation. Due to the elimination of contact between the rolling elements, noise levels due to collision are drastically reduced.

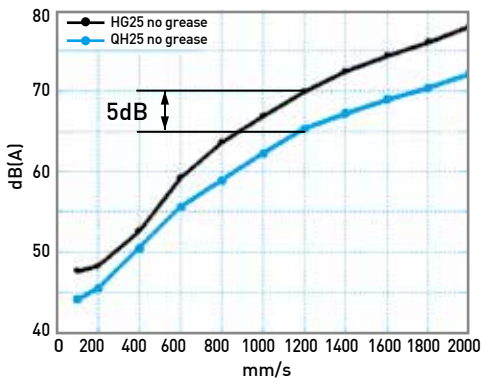

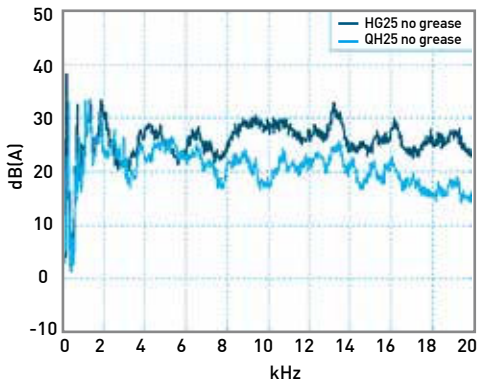

(2) Self-Lubricant Design

The partition is a grouping of hollow ring-like structures formed with a through-hole to facilitate circulation of the lubricant. Because of the special lubrication path design, the lubricant of the partition storage space can be refilled. Therefore, the frequency of lubricant refilling can be decreased.
The QH-series linear guideway is pre-lubricated. Performance testing at a 0.2C (basic dynamic load) shows that after running 4,000km no damage was apparent to either the rolling elements or the raceway.

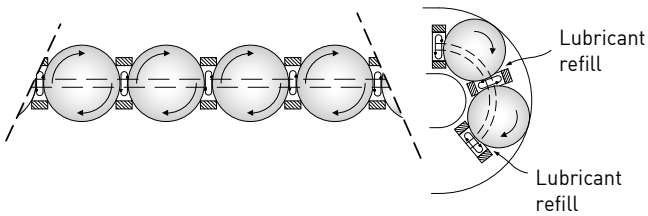

QH Series

Heavy Load Type

Table 2-5-1 **Load Test**

Test Sample	QHH25CAZAH	Load Test
Speed	24m/min	
Lubricant	lithium soap base grease (initial lubrication only)	
Load	5kN	
Distance travel	4,000km	

(3) Smooth Movement

In standard linear guideways, rolling elements on the load side of the guide block begin rolling and push their way through the raceway. When they contact other rolling elements they create counter-rotational friction. This results in a great variation of rolling resistance. The QH linear guideway, with SynchMotion® technology prevents this condition. As the block starts to move, the rolling elements begin rolling consecutively and remain separated to prevent contact with one another thus keeping the element's kinetic energy extremely stable in order to effectively reduce fluctuations in rolling resistance.

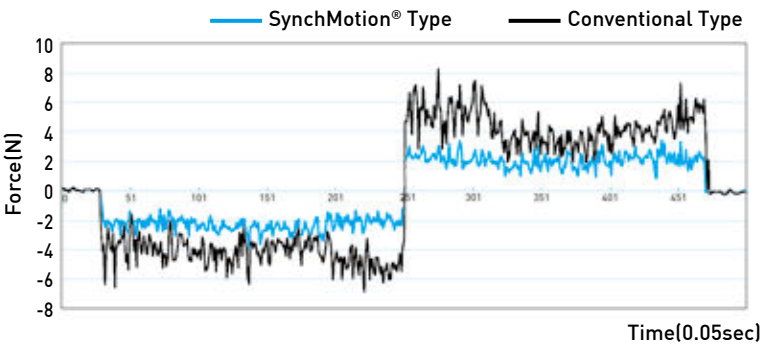

(4) High Speed Performance

The QH series offers excellent high-speed performance due to the partitions of the SynchMotion® structure. They are employed to separate the adjacent balls thereby resulting in low rolling traction and the metallic friction between adjacent balls is eliminated.

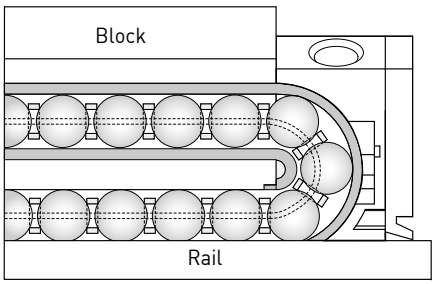

Table 2-5-2

Test Sample	QHW25CAZAH	High Speed Test
Speed	130m/min	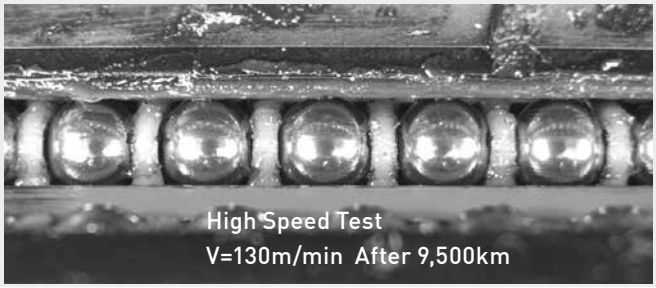
Lubricant	lithium soap base grease (initial lubrication only)	
Distance travel	9,500km	

2-5-2 Construction

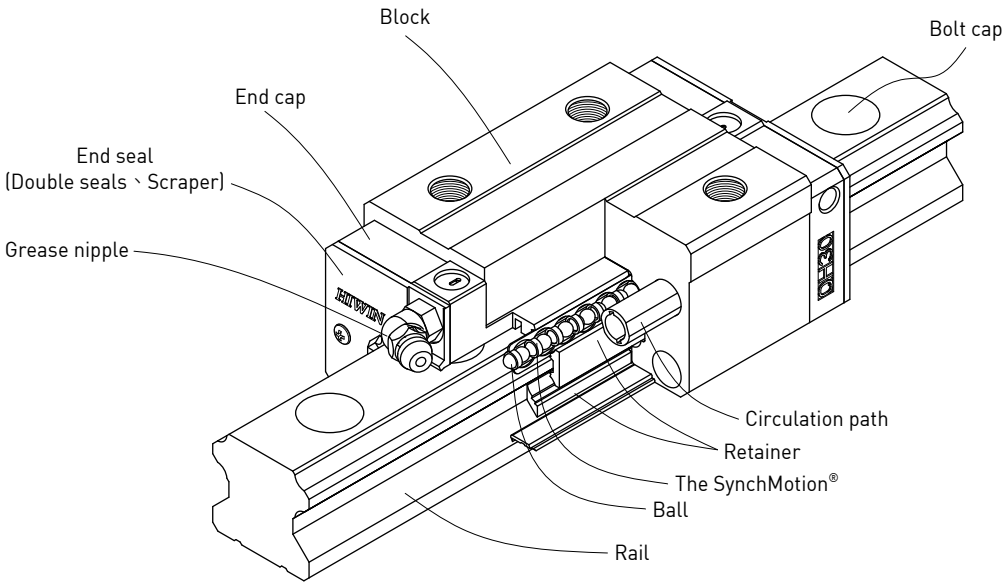

2-5-3 Model Number of QH Series

QH series guideway can be classified into non-interchangeable and interchangeable types. The sizes are identical. The main difference is that the interchangeable blocks and rails can be freely exchanged. Because of dimensional control, the interchangeable type linear guideway is a perfect choice for the client when rails do not need to be paired for an axis. And since the QH and HG share the identical rails, the customer does not need to redesign when choosing the QH series. Therefore the QH linear guideway has increased applicability.

QH Series

Heavy Load Type

(1) Non-interchangeable type

QH W 25 C A E 2 R 1600 E ZA P II + KK/E2+RC

- QH Series
- Block Type
  W : Flange Type
  H : Square Type
- Model size
  15, 20, 25, 30, 35, 45
- Load Type
  C : Heavy Load
  H : Super Heavy Load
- Block Mounting
  A : Mounting From Top
  B : Bottom
  C : Top or Bottom
- E: Special Block
  None: Standard Block
- No. of Blocks per Rail
- Rail Mounting Type
  R : Mounting From Top
  T : Bottom
- Rail Length (mm)
- E: Special Rail
  None: Standard Rail
- Preload Code: Z0, ZA, ZB
- Precision Code:
  C, H, P, SP, UP
- No. of Rails per Axis set [1]
- Dust Protection[2]
- E2:Self-lubrication Type
- RC:Reinforced Cap

Note : 1. The roman numerals representing the number of rails used in one axis.
As for the single rail in an axis, it shows no symbol.
2. For dust protection, it is no symbol if it is standard (end seal and bottom seal).
ZZ : End seal, bottom seal and scraper.
KK : Double seals, bottom seal and scraper.
DD : Double seals and bottom seal.

(2) Interchangeable type

- Model Number of QH Block

QH W 25 C A E ZA P + KK/E2

- QH Series
- Block Type
  W : Flange Type
  H : Square Type
- Model size
  15, 20, 25, 30, 35, 45
- Load Type
  C : Heavy Load
  H : Super Heavy Load
- Block Mounting Type
  A : Mounting From Top
  B : Bottom, C : Top or Bottom
- E: Special Block
  None: Standard Block
- Preload Code : Z0, ZA
- Precision Code : C, H, P
- Dust Protection[2]
- E2 : Self-lubrication Type

- Model Number of QH Rail (QH and HG share the identical rails)

HG R 25 R 1600 E P + RC

- QH/HG Series
- Interchangeable Rail
- Model size
  15, 20, 25, 30, 35, 45
- Rail Mounting Type
  R : Mounting From Top
  T : Bottom
- Rail Length (mm)
- E: Special Rail, None: Standard Rail
- Precision Code : C, H, P
- RC : Reinforced Cap

2-5-4 Types

(1) Block types

HIWIN offers two types of linear guideways, flange and square types.

Table 2-5-3 **Block Types**

Type	Model	Shape	Height (mm)	Rail Length (mm)	Main Applications
Square	QHH-CA QHH-HA	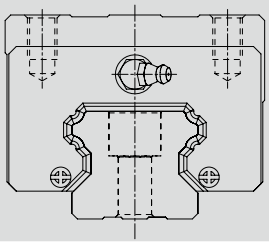	28 ↓ 70	100 ↓ 4000	○ Automation devices ○ High-speed transportation equipment ○ Precision measuring equipment ○ Semiconductor manufacturing equipment
Flange	QHW-CA QHW-HA	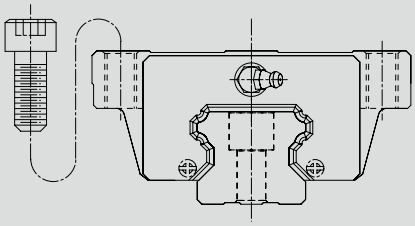	24 ↓ 60	100 ↓ 4000	
	QHW-CB QHW-HB	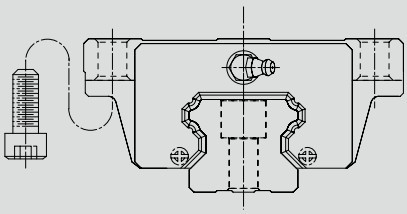	24 ↓ 60	100 ↓ 4000	
	QHW-CC QHW-HC	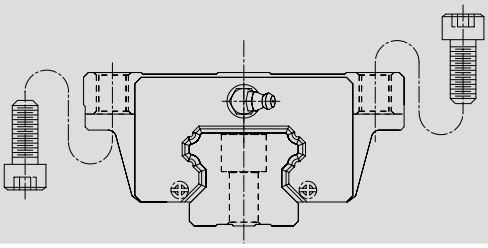	24 ↓ 60	100 ↓ 4000	

(2) Rail types

Besides the standard top mounting type, the bottom mounting type is also available.

Table 2-5-4 **Rail Types**

Mounting from Top	Mounting from bottom
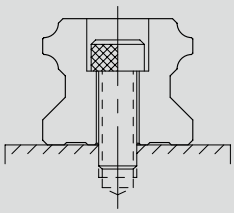	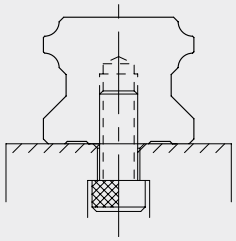

QH Series

Heavy Load Type

2-5-5 Accuracy Classes

The accuracy of QH series can be classified into normal (C), high (H), precision (P), super precision (SP), ultra precision (UP), five classes. Please choose the class by referring the accuracy of applied equipment.

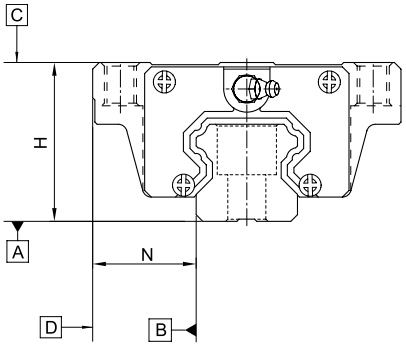

(1) Accuracy of non-interchangeable

Table 2-5-5 **Accuracy Standards** Unit: mm

Item	QH - 15, 20				
Accuracy Classes	Normal (C)	High (H)	Precision (P)	Super Precision (SP)	Ultra Precision (UP)
Dimensional tolerance of height H	± 0.1	± 0.03	0 - 0.03	0 - 0.015	0 - 0.008
Dimensional tolerance of width N	± 0.1	± 0.03	0 - 0.03	0 - 0.015	0 - 0.008
Variation of height H	0.02	0.01	0.006	0.004	0.003
Variation of width N	0.02	0.01	0.006	0.004	0.003
Running parallelism of block surface C to surface A	See Table 2-5-11				
Running parallelism of block surface D to surface B	See Table 2-5-11				

Table 2-5-6 **Accuracy Standards** Unit: mm

Item	QH - 25, 30, 35				
Accuracy Classes	Normal (C)	High (H)	Precision (P)	Super Precision (SP)	Ultra Precision (UP)
Dimensional tolerance of height H	± 0.1	± 0.04	0 - 0.04	0 - 0.02	0 - 0.01
Dimensional tolerance of width N	± 0.1	± 0.04	0 - 0.04	0 - 0.02	0 - 0.01
Variation of height H	0.02	0.015	0.007	0.005	0.003
Variation of width N	0.03	0.015	0.007	0.005	0.003
Running parallelism of block surface C to surface A	See Table 2-5-11				
Running parallelism of block surface D to surface B	See Table 2-5-11				

Table 2-5-7 **Accuracy Standards** Unit: mm

Item	QH - 45				
Accuracy Classes	Normal (C)	High (H)	Precision (P)	Super Precision (SP)	Ultra Precision (UP)
Dimensional tolerance of height H	± 0.1	± 0.05	0 - 0.05	0 - 0.03	0 - 0.02
Dimensional tolerance of width N	± 0.1	± 0.05	0 - 0.05	0 - 0.03	0 - 0.02
Variation of height H	0.03	0.015	0.007	0.005	0.003
Variation of width N	0.03	0.02	0.01	0.007	0.005
Running parallelism of block surface C to surface A	See Table 2-5-11				
Running parallelism of block surface D to surface B	See Table 2-5-11				

(2) Accuracy of interchangeable

Table 2-5-8 **Accuracy Standards**

Unit: mm

Item	QH - 15, 20		
Accuracy Classes	Normal (C)	High (H)	Precision (P)
Dimensional tolerance of height H	± 0.1	± 0.03	± 0.015
Dimensional tolerance of width N	± 0.1	± 0.03	± 0.015
Variation of height H	0.02	0.01	0.006
Variation of width N	0.02	0.01	0.006
Running parallelism of block surface C to surface A	See Table 2-5-11		
Running parallelism of block surface D to surface B	See Table 2-5-11		

Table 2-5-9 **Accuracy Standards**

Unit: mm

Item	QH - 25, 30, 35		
Accuracy Classes	Normal (C)	High (H)	Precision (P)
Dimensional tolerance of height H	± 0.1	± 0.04	± 0.02
Dimensional tolerance of width N	± 0.1	± 0.04	± 0.02
Variation of height H	0.02	0.015	0.007
Variation of width N	0.03	0.015	0.007
Running parallelism of block surface C to surface A	See Table 2-5-11		
Running parallelism of block surface D to surface B	See Table 2-5-11		

Table 2-5-10 **Accuracy Standards**

Unit: mm

Item	QH - 45		
Accuracy Classes	Normal (C)	High (H)	Precision (P)
Dimensional tolerance of height H	± 0.1	± 0.05	± 0.025
Dimensional tolerance of width N	± 0.1	± 0.05	± 0.025
Variation of height H	0.03	0.015	0.007
Variation of width N	0.03	0.02	0.01
Running parallelism of block surface C to surface A	See Table 2-5-11		
Running parallelism of block surface D to surface B	See Table 2-5-11		

QH Series

Heavy Load Type

(3) Accuracy of running parallelism

Table 2-5-11 **Accuracy of Running Parallelism**

Rail Length (mm)	Accuracy (μm)				
	C	H	P	SP	UP
~ 100	12	7	3	2	2
100 ~ 200	14	9	4	2	2
200 ~ 300	15	10	5	3	2
300 ~ 500	17	12	6	3	2
500 ~ 700	20	13	7	4	2
700 ~ 900	22	15	8	5	3
900 ~ 1,100	24	16	9	6	3
1,100 ~ 1,500	26	18	11	7	4
1,500 ~ 1,900	28	20	13	8	4
1,900 ~ 2,500	31	22	15	10	5
2,500 ~ 3,100	33	25	18	11	6
3,100 ~ 3,600	36	27	20	14	7
3,600 ~ 4,000	37	28	21	15	7

2-5-6 Preload

(1) Definition

A preload can be applied to each guideway. Oversized balls are used. Generally, a linear motion guideway has a negative clearance between groove and balls in order to improve stiffness and maintain high precision. The figure shows the load is multiplied by the preload, the rigidity is doubled and the deflection is reduced by one half. The preload no larger than ZA would be recommended for the model size under QH20 to avoid an over-preload affecting the guideway's life.

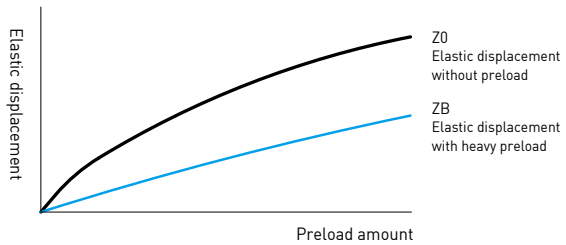

(2) Preload classes

HIWIN offers three classes of standard preload for various applications and conditions.

Table 2-5-12 **Preload Classes**

Class	Code	Preload	Condition	Examples of Application
Light Preload	Z0	0~ 0.02C	Certain load direction,low impact, low precision required	Transportation devices, auto-packing machines, X-Y axis for general industrial machines, welding machines, welders
Medium Preload	ZA	0.05C~0.07C	High precision required	Machining centers, Z axis for general industrial, machines, EDM, NC lathes, Precision X-Y tables, measuring equipment
Heavy Preload	ZB	0.10C~ 0.12C	High rigidity required, with vibration and impact	Machining centers, grinding machines, NC lathes, horizontal and vertical milling machines, Z axis of machine tools, Heavy cutting machines

Class	Interchangeable Guideway	Non-Interchangeable Guideway
Preload classes	Z0, ZA	Z0, ZA, ZB

Note: The "C" in the preload column denotes basic dynamic load rating.

2-5-7 Mounting location

The standard location of the grease fitting is at both ends of the block, but the nipple can be mounted at each side of block. For lateral installation, we recommend that the nipple be mounted at the non-reference side, otherwise please contact us. It is possible to perform lubrication by using the oil-piping joint.

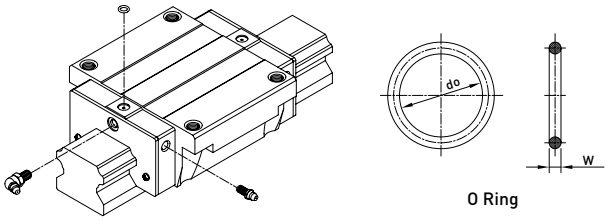

Table 2-5-13 **O-Ring size and max. permissible depth for piercing**

Size	O-Ring		Lube hole at top: max. permissible depth for piercing
	do (mm)	W (mm)	T_{max} (mm)
QH 15	3±0.15	1±0.15	3.75
QH 20	4.5±0.15	1.5±0.15	5.7
QH 25	4.5±0.15	1.5±0.15	5.8
QH 30	4.5±0.15	1.5±0.15	6.3
QH 35	4.5±0.15	1.5±0.15	8
QH 45	4.5±0.15	1.5±0.15	8.2

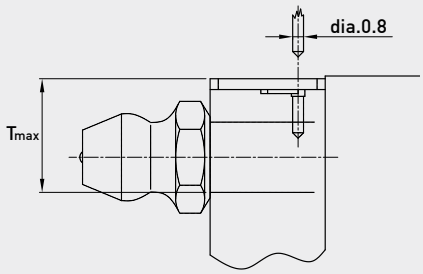

2-5-8 Dust Proof Accessories

(1) Codes of accessories

If the following accessories are needed, please add the code followed by the model number.

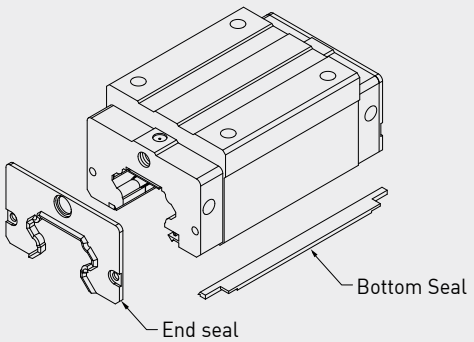

No symbol: Standard Protection (End seal + Bottom Seal)

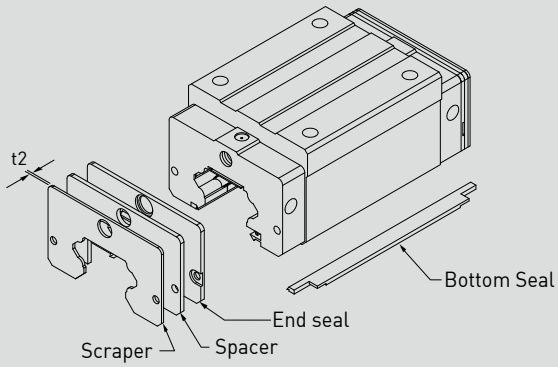

ZZ (End seal + Bottom Seal + Scraper)

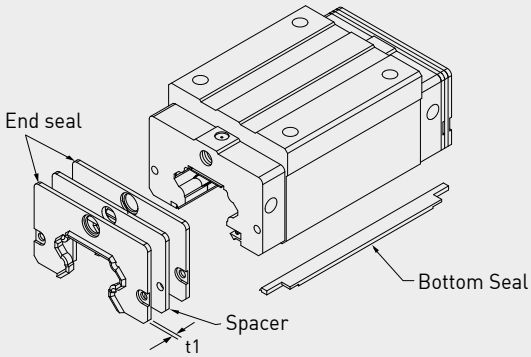

DD (Double seals + Bottom Seal)

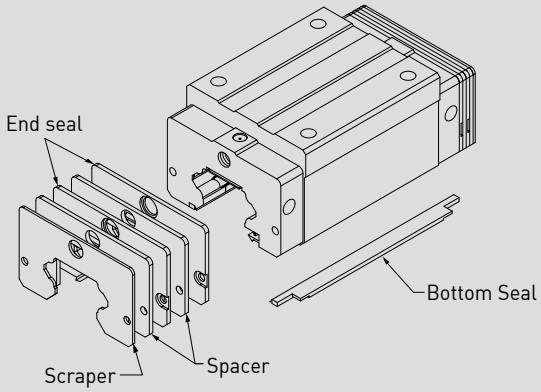

KK (Double seals + Bottom Seal + Scraper)

QH Series

Heavy Load Type

(2) End seal and bottom seal

To prevent life reduction caused by iron chips or dust entering the block.

(3) Double seals

Enhances the wiping effect, foreign matter can be completely wiped off.

Table 2-5-14 **Dimensions of end seal**

Size	Thickness (t1) (mm)	Size	Thickness (t1) (mm)
QH15 ES	3	QH30 ES	3.2
QH20 ES	2.5	QH35 ES	2.5
QH25 ES	2.5	QH45 ES	3.6

(4) Scraper

The scraper removes high-temperature iron chips and larger foreign objects.

Table 2-5-15 **Dimensions of scraper**

Size	Thickness (t2) (mm)	Size	Thickness (t2) (mm)
QH15 SC	1.5	QH30 SC	1.5
QH20 SC	1.5	QH35 SC	1.5
QH25 SC	1.5	QH45 SC	1.5

(5) Dimensions of block equipped with the dustproof parts

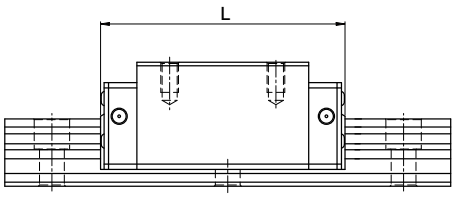

Table 2-5-16 **Overall block length**

unit: mm

Size	Overall block length (L)			
	SS	ZZ	DD	KK
QH15C	61.4 (61.8)	68.4 (69.4)	68.0 (68.4)	75.0 (76.0)
QH20C	76.7 (78.9)	81.9 (84.5)	81.7 (83.9)	86.9 (89.5)
QH20H	91.4 (93.6)	96.6 (99.2)	96.4 (98.6)	101.6 (104.2)
QH25C	83.4 (86.0)	89.4 (92.0)	88.4 (91.0)	94.4 (97.0)
QH25H	104.0 (106.6)	110.0 (112.6)	109.0 (111.6)	115.0 (117.6)
QH30C	97.4 (99.4)	104.8 (107.4)	104.8 (106.8)	112.2 (114.8)
QH30H	120.4 (122.4)	127.8 (130.4)	127.8 (129.8)	135.2 (137.8)
QH35C	113.6 (114.4)	119.0 (120.0)	118.6 (119.4)	124.0 (125.0)
QH35H	139.4 (140.2)	144.8 (145.8)	144.4 (145.2)	149.8 (150.8)
QH45C	139.4 (139.4)	147.2 (147.2)	146.6 (146.6)	154.4 (154.4)
QH45H	171.2 (171.2)	179.0 (179.0)	178.4 (178.4)	186.2 (186.2)

Note : The marking of "( )" denotes the maximum block length with screws, lips of end seals, etc.

2-5-9 Friction

The maximum value of seal resistance per block are shown in the table.

Table 2-5-17 **Seal Resistance**

Size	Resistance N (kgf)
QH15	1.2 (0.12)
QH20	1.6 (0.16)
QH25	2.0 (0.2)
QH30	2.7 (0.27)
QH35	3.1 (0.31)
QH45	5.3 (0.53)

2-5-10 The Accuracy Tolerance of Mounting Surface

(1) The accuracy tolerance of rail-mounting surface

Because of the Circular-arc contact design, the QH linear guideway can compensate for some surface-error on installation and still maintain smooth linear motion.
As long as the accuracy requirements for the mounting surface are followed, high accuracy and rigidity of linear motion of the guideway can be obtained without any difficulty. In order to satisfy the needs of fast installation and smooth movement, HIWIN offers the normal clearance type of preload to customers of its high absorption ability of the deviation in mounting surface accuracy.

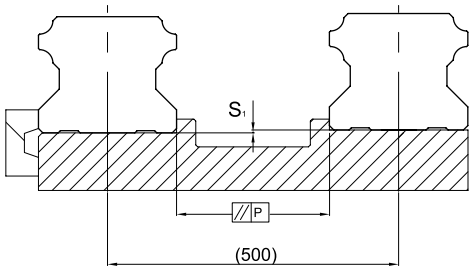

(2) The parallelism tolerance of reference surface

Table 2-5-18 **Max. Parallelism Tolerance (P)**

unit: μm

Size	Preload classes		
	Z0	ZA	ZB
QH15	25	18	-
QH20	25	20	18
QH25	30	22	20
QH30	40	30	27
QH35	50	35	30
QH45	60	40	35

(3) The accuracy tolerance of reference surface height

Table 2-5-19 **Max. Tolerance of Reference Surface Height (S_1)**

unit: μm

Size	Preload classes		
	Z0	ZA	ZB
QH15	130	85	-
QH20	130	85	50
QH25	130	85	70
QH30	170	110	90
QH35	210	150	120
QH45	250	170	140

Note : Tolerance is proportional to distance of two rails.

QH Series

Heavy Load Type

2-5-11 Cautions for Installation

(1) Shoulder heights and fillets

Improper shoulder heights and fillets of mounting surfaces will cause a deviation in accuracy and the interference with the rail or block. As long as the recommended shoulder heights and fillets are followed, installation inaccuracies should be eliminated.

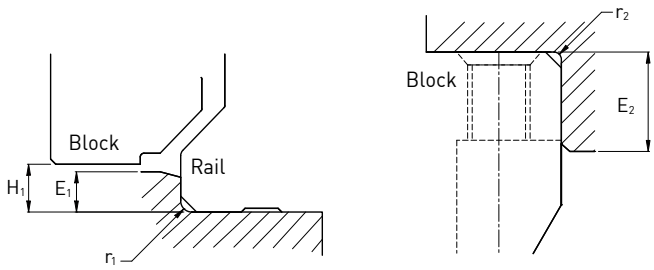

Table 2-5-20 **Shoulder Heights and Fillets**

Size	Max. radius of fillets r_1 (mm)	Max. radius of fillets r_2 (mm)	Shoulder height beside the rail E_1 (mm)	Shoulder height beside the block E_2 (mm)	Clearance under block H_1 (mm)
QH15	0.5	0.5	3.0	4.0	4.0
QH20	0.5	0.5	3.5	5.0	4.6
QH25	1.0	1.0	5.0	5.0	5.5
QH30	1.0	1.0	5.0	5.0	6.0
QH35	1.0	1.0	6.0	6.0	7.5
QH45	1.0	1.0	8.0	8.0	9.2

(2) Tightening Torque of Bolts for Installation

Improper tightening of bolts will seriously influence the accuracy of Linear Guideway installation. The following tightening torques for different sizes of bolts are recommended.

Table 2-5-21 **Mounting Torque**

Size	Bolt size	Torque N-cm(kgf-cm)		
		Iron	Casting	Aluminum
QH15	M4×0.7P×16L	392 (40)	274 (28)	206 (21)
QH20	M5×0.8P×16L	883 (90)	588 (60)	441 (50)
QH25	M6×1P×20L	1373 (140)	921 (94)	686 (70)
QH30	M8×1.25P×25L	3041 (310)	2010 (205)	1470 (150)
QH35	M8×1.25P×25L	3041 (310)	2010 (205)	1470 (150)
QH45	M12×1.75P×35L	11772 (1200)	7840 (800)	5880 (600)

Note : 1 kgf = 9.81 N

2-5-12 Dimensions for HIWIN QH Series

(1) QHH-CA / QHH-HA

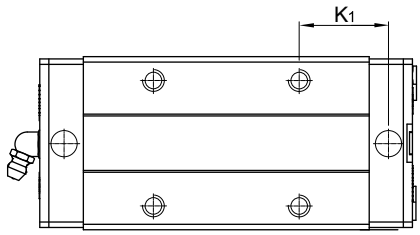

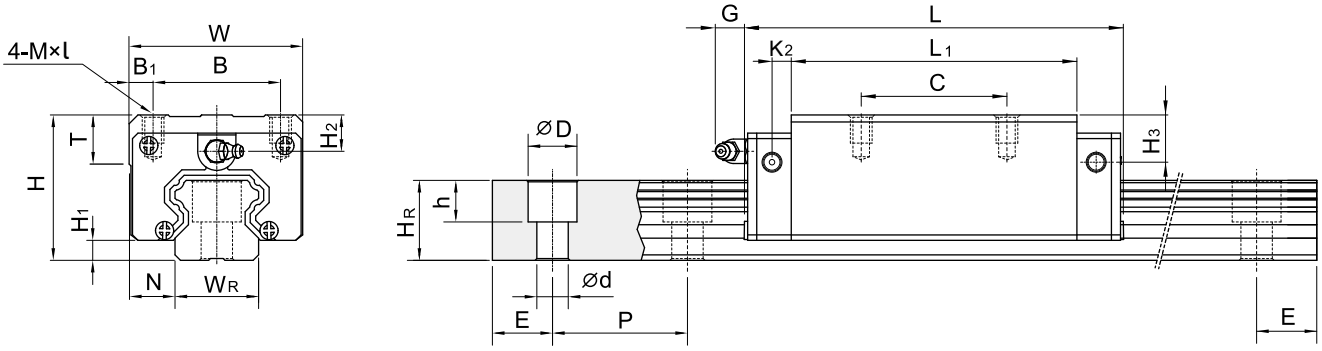

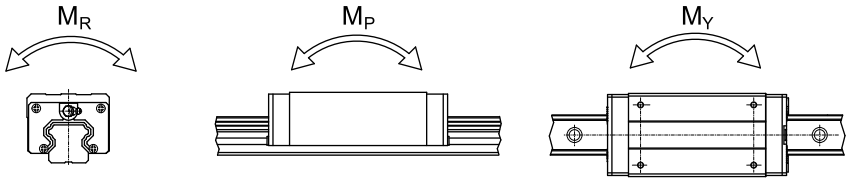

Model No.	Dimensions of Assembly (mm)			Dimensions of Block (mm)													Dimensions of Rail (mm)							Mounting Bolt for Rail	Basic Dynamic Load Rating	Basic Static Load Rating	Static Rated Moment			Weight	
	H	H_1	N	W	B	B_1	C	L_1	L	K_1	K_2	G	Mxl	T	H_2	H_3	W_R	H_R	D	h	d	P	E	(mm)	C(kN)	C_0 (kN)	M_R kN-m	M_P kN-m	M_Y kN-m	Block kg	Rail kg/m
QHH15CA	28	4	9.5	34	26	4	26	39.4	61.4	10	5	5.3	M4 x 5	6	7.95	8.2	15	15	7.5	5.3	4.5	60	20	M4x16	17.94	19.86	0.10	0.08	0.08	0.18	1.45
QHH20CA	30	4.6	12	44	32	6	36	50.5	76.7	11.75	6	12	M5 x 6	8	6	6	20	17.5	9.5	8.5	6	60	20	M5x16	30.0	33.86	0.26	0.19	0.19	0.29	2.21
QHH20HA							50	65.2	91.4	12.1															35.7	42.31	0.31	0.27	0.27	0.38	
QHH25CA	40	5.5	12.5	48	35	6.5	35	58	83.4	15.7	6	12	M6 x8	8	10	9	23	22	11	9	7	60	20	M6x20	41.9	48.75	0.39	0.31	0.31	0.50	3.21
QHH25HA							50	78.6	104	18.5															50.61	60.94	0.50	0.45	0.45	0.68	
QHH30CA	45	6	16	60	40	10	40	70	97.4	19.5	6.25	12	M8x10	8.5	9.5	9	28	26	14	12	9	80	20	M8x25	58.26	66.34	0.60	0.5	0.50	0.87	4.47
QHH30HA							60	93	120.4	21.75															70.32	88.45	0.83	0.89	0.89	1.15	
QHH35CA	55	7.5	18	70	50	10	50	80	113.6	19	7.5	12	M8x12	10.2	15.5	13.5	34	29	14	12	9	80	20	M8x25	78.89	86.66	1.07	0.76	0.76	1.44	6.30
QHH35HA							72	105.8	139.4	20.9															95.23	115.55	1.45	1.33	1.33	1.90	
QHH45CA	70	9.2	20.5	86	60	13	60	97	139.4	23	10	12.9	M10x17	16	18.5	20	45	38	20	17	14	105	22.5	M12×35	119.4	135.42	1.83	1.38	1.38	2.72	10.41
QHH45HA							80	128.8	171.2	29.09															144.13	180.56	2.47	2.41	2.41	3.59	

Note : 1 kgf = 9.81 N

QH Series

Heavy Load Type

(2) QHW-CA / QHW-HA

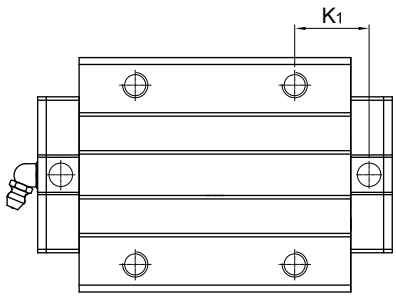

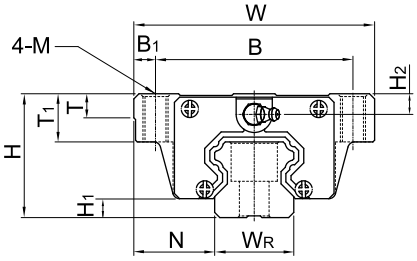

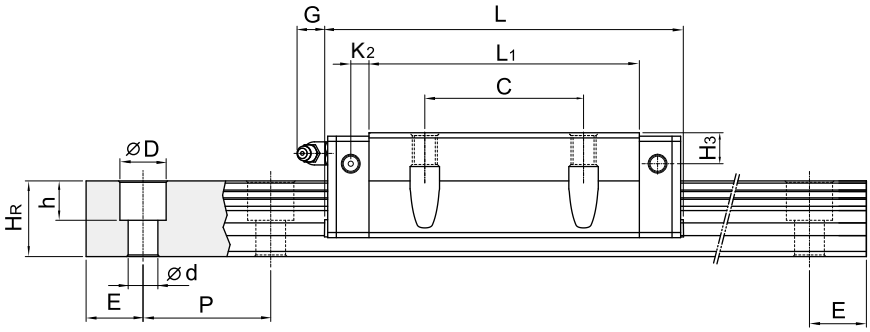

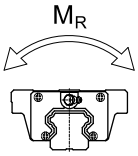

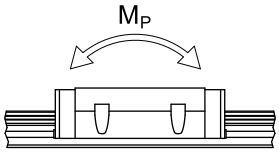

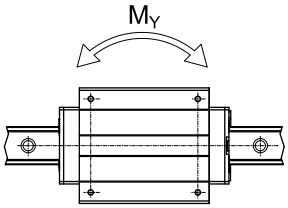

Model No.	Dimensions of Assembly (mm)			Dimensions of Block (mm)													Dimensions of Rail (mm)							Mounting Bolt for Rail	Basic Dynamic Load Rating	Basic Static Load Rating	Static Rated Moment			Weight	
	H	H_1	N	W	B	B_1	C	L_1	L	K_1	K_2	G	M	T	T_1	H_2	H_3	W_R	H_R	D	h	d	P	E	(mm)	C(kN)	C_0 (kN)	M_R kN-m	M_P kN-m	M_Y kN-m	Block kg	Rail kg/m
QHW15CA	24	4	16	47	38	4.5	30	39.4	61.4	8	5	5.3	M5	6	8.9	3.95	4.2	15	15	7.5	5.3	4.5	60	20	M4x16	17.94	19.86	0.1	0.08	0.08	0.17	1.45
QHW20CA	30	4.6	21.5	63	53	5	40	50.5	76.7	9.75	6	12	M6	8	10	6	6	20	17.5	9.5	8.5	6	60	20	M5x16	30.0	33.86	0.26	0.19	0.19	0.40	2.21
QHW20HA								65.2	91.4	17.1																35.7	42.31	0.31	0.27	0.27	0.52	
QHW25CA	36	5.5	23.5	70	57	6.5	45	58	83.4	10.7	6	12	M8	8	14	6	5	23	22	11	9	7	60	20	M6x20	41.9	48.75	0.39	0.31	0.31	0.59	3.21
QHW25HA								78.6	104	21																50.61	60.94	0.5	0.45	0.45	0.80	
QHW30CA	42	6	31	90	72	9	52	70	97.4	13.5	6.25	12	M10	8.5	16	6.5	6	28	26	14	12	9	80	20	M8x25	58.26	66.34	0.6	0.5	0.5	1.09	4.47
QHW30HA								93	120.4	25.75																70.32	88.45	0.83	0.89	0.89	1.44	
QHW35CA	48	7.5	33	100	82	9	62	80	113.6	13	7.5	12	M10	10.1	18	8.5	6.5	34	29	14	12	9	80	20	M8x25	78.89	86.66	1.07	0.76	0.76	1.56	6.30
QHW35HA								105.8	139.4	25.9																95.23	115.55	1.45	1.33	1.33	2.06	
QHW45CA	60	9.2	37.5	120	100	10	80	97	139.4	13	10	12.9	M12	15.1	22	8.5	10	45	38	20	17	14	105	22.5	M12x35	119.4	135.42	1.83	1.38	1.38	2.79	10.41
QHW45HA								128.8	171.2	28.9																144.13	180.56	2.47	2.41	2.41	3.69	

Note : 1 kgf = 9.81 N

(3) QHW-CB / QHW-HB

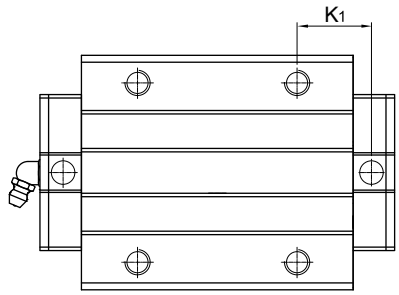

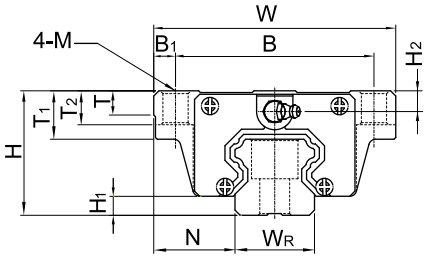

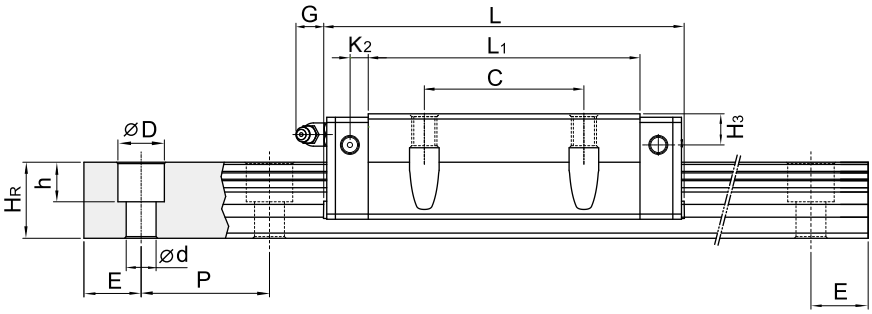

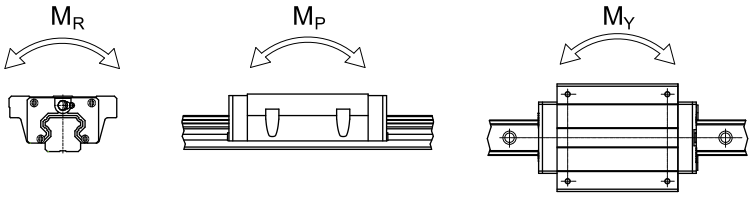

Model No.	Dimensions of Assembly (mm)			Dimensions of Block (mm)															Dimensions of Rail (mm)							Mounting Bolt for Rail	Basic Dynamic Load Rating	Basic Static Load Rating	Static Rated Moment			Weight	
	H	H_1	N	W	B	B_1	C	L_1	L	K_1	K_2	G	M	T	T_1	T_2	H_2	H_3	W_R	H_R	D	h	d	P	E	(mm)	C(kN)	C_0 (kN)	M_R kN-m	M_P kN-m	M_Y kN-m	Block kg	Rail kg/m
QHW15CB	24	4	16	47	38	4.5	30	39.4	61.4	8	5	5.3	Ø4.5	6	8.9	6.95	3.95	4.2	15	15	7.5	5.3	4.5	60	20	M4x16	17.94	19.86	0.1	0.08	0.08	0.17	1.45
QHW20CB	30	4.6	21.5	63	53	5	40	50.5	76.7	9.75	6	12	Ø6	8	10	9.5	6	6	20	17.5	9.5	8.5	6	60	20	M5x16	30.0	33.86	0.26	0.19	0.19	0.40	2.21
QHW20HB								65.2	91.4	17.1																	35.7	42.31	0.31	0.27	0.27	0.52	
QHW25CB	36	5.5	23.5	70	57	6.5	45	58	83.4	10.7	6	12	Ø7	8	14	10	6	5	23	22	11	9	7	60	20	M6x20	41.9	48.75	0.39	0.31	0.31	0.59	3.21
QHW25HB								78.6	104	21																	50.61	60.94	0.5	0.45	0.45	0.80	
QHW30CB	42	6	31	90	72	9	52	70	97.4	13.5	6.25	12	Ø9	8.5	16	10	6.5	6	28	26	14	12	9	80	20	M8x25	58.26	66.34	0.6	0.5	0.5	1.09	4.47
QHW30HB								93	120.4	25.75																	70.32	88.45	0.83	0.89	0.89	1.44	
QHW35CB	48	7.5	33	100	82	9	62	80	113.6	13	7.5	12	Ø9	10.1	18	13	8.5	6.5	34	29	14	12	9	80	20	M8x25	78.89	86.66	1.07	0.76	0.76	1.56	6.30
QHW35HB								105.8	139.4	25.9																	95.23	115.55	1.45	1.33	1.33	2.06	
QHW45CB	60	9.2	37.5	120	100	10	80	97	139.4	13	10	12.9	Ø11	15.1	22	15	8.5	10	45	38	20	17	14	105	22.5	M12x35	119.4	135.42	1.83	1.38	1.38	2.79	10.41
QHW45HB								128.8	171.2	28.9																	144.13	180.56	2.47	2.41	2.41	3.69	

Note : 1 kgf = 9.81 N

QH Series

Heavy Load Type

(4) QHW-CC / QHW-HC

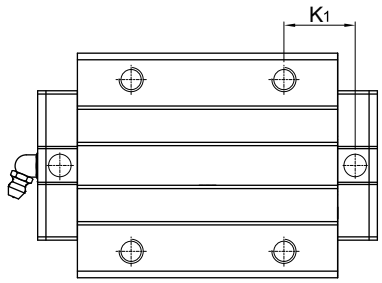

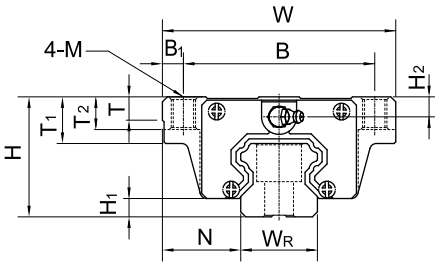

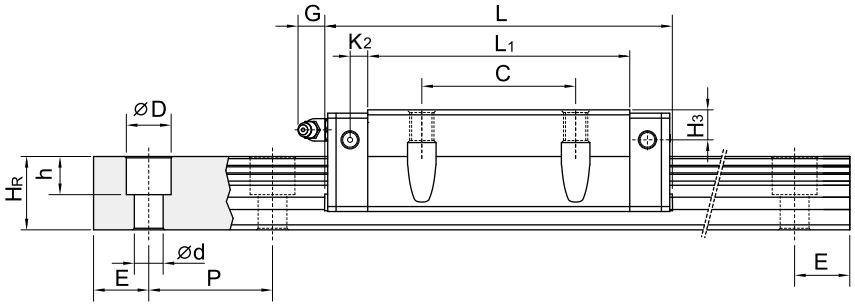

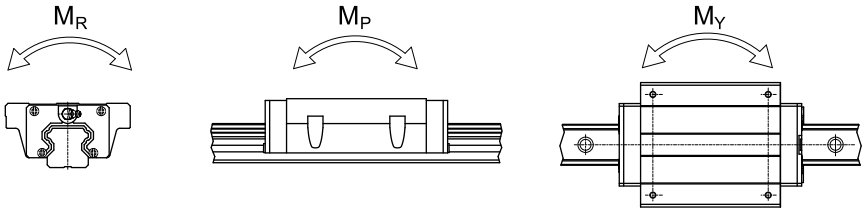

Model No.	Dimensions of Assembly (mm)			Dimensions of Block (mm)															Dimensions of Rail (mm)							Mounting Bolt for Rail	Basic Dynamic Load Rating	Basic Static Load Rating	Static Rated Moment			Weight	
	H	H_1	N	W	B	B_1	C	L_1	L	K_1	K_2	G	M	T	T_1	T_2	H_2	H_3	W_R	H_R	D	h	d	P	E	(mm)	C(kN)	C_0 (kN)	M_R kN-m	M_P kN-m	M_Y kN-m	Block kg	Rail kg/m
QHW15CC	24	4	16	47	38	4.5	30	39.4	61.4	8	5	5.3	M5	6	8.9	6.95	3.95	4.2	15	15	7.5	5.3	4.5	60	20	M4x16	17.94	19.86	0.1	0.08	0.08	0.17	1.45
QHW20CC	30	4.6	21.5	63	53	5	40	50.5	76.7	9.75	6	12	M6	8	10	9.5	6	6	20	17.5	9.5	8.5	6	60	20	M5x16	30.0	33.86	0.26	0.19	0.19	0.40	2.21
QHW20HC								65.2	91.4	17.1																	35.7	42.31	0.31	0.27	0.27	0.52	
QHW25CC	36	5.5	23.5	70	57	6.5	45	58	83.4	10.7	6	12	M8	8	14	10	6	5	23	22	11	9	7	60	20	M6x20	41.9	48.75	0.39	0.31	0.31	0.59	3.21
QHW25HC								78.6	104	21																	50.61	60.94	0.5	0.45	0.45	0.80	
QHW30CC	42	6	31	90	72	9	52	70	97.4	13.5	6.25	12	M10	8.5	16	10	6.5	6	28	26	14	12	9	80	20	M8x25	58.26	66.34	0.6	0.5	0.5	1.09	4.47
QHW30HC								93	120.4	25.75																	70.32	88.45	0.83	0.89	0.89	1.44	
QHW35CC	48	7.5	33	100	82	9	62	80	113.6	13	7.5	12	M10	10.1	18	13	8.5	6.5	34	29	14	12	9	80	20	M8x25	78.89	86.66	1.07	0.76	0.76	1.56	6.30
QHW35HC								105.8	139.4	25.9																	95.23	115.55	1.45	1.33	1.33	2.06	
QHW45CC	60	9.2	37.5	120	100	10	80	97	139.4	13	10	12.9	M12	15.1	22	15	8.5	10	45	38	20	17	14	105	22.5	M12x35	119.4	135.42	1.83	1.38	1.38	2.79	10.41
QHW45HC								128.8	171.2	28.9																	144.13	180.56	2.47	2.41	2.41	3.69	

Note : 1 kgf = 9.81 N

2-6 QE Series – Low Profile Linear Guideway, with SynchMotion® Technology

The development of QE linear guideway is based on a four-row circular-arc contact. The QE series linear guideway with SynchMotion® Technology offers smooth movement, superior lubrication, quieter operation and longer running life. Therefore the QE linear guideway has broad industrial applicability. In the high-tech industry where high speed, low noise, and reduced dust generation is required, the QE series is interchangeable with the EG series.

2-6-1 Construction

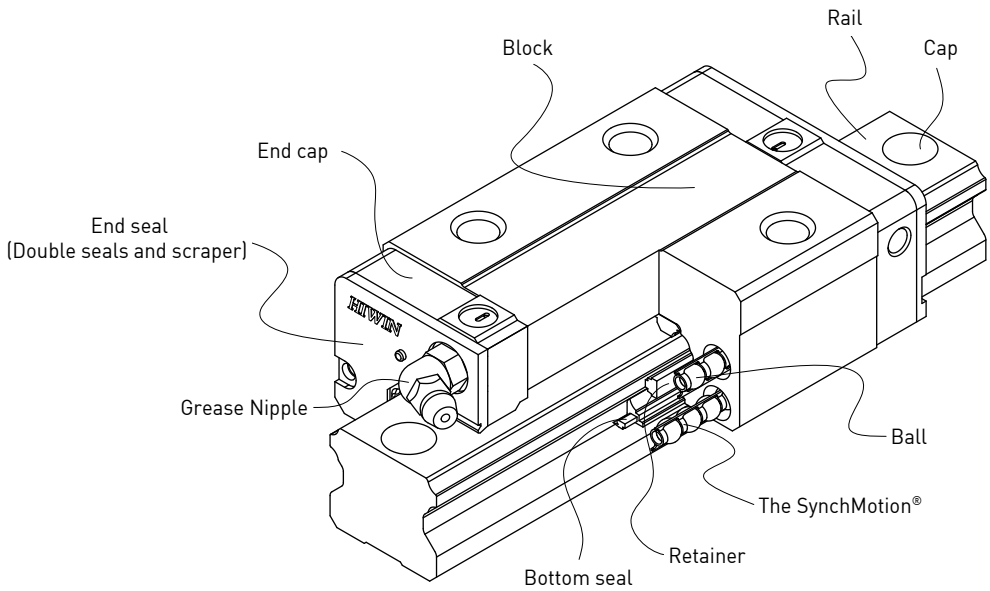

2-6-2 Model Number of QE Series

QE series guideway can be classified into non-interchangeable and interchangeable types. The sizes are identical. The main difference is that the interchangeable blocks and rails can be freely exchanged. Because of dimensional control, the interchangeable type linear guideway is a perfect choice for the client when rails do not need to be paired for an axis. And since the QE and EG share the identical rails, the customer does not need to redesign when choosing the QE series. Therefore the QE linear guideway has increased applicability.

QE Series

Low Profile

(1) Non-interchangeable type

QE W 25 C A E 2 R 1600 E ZA P II + KK+RC

- QE Series
- Block Type
  W : Flange Type
  H : Square Type
- Model size
  15, 20, 25, 30, 35
- Load Type
  C : Heavy Load
  S : Medium Load
- Block Mounting
  A : Mounting From Top
  B : Bottom
- E: Special Block
  None: Standard Block
- No. of Blocks per Rail
- Rail Mounting Type
  R/U : Mounting From Top
  T : Bottom
- Rail Length (mm)
- E: Special Rail
  None: Standard Rail
- Preload Code: Z0, ZA, ZB
- Precision Code:
  C, H, P, SP, UP
- No. of Rails per Axis set [1]
- Dust Protection[2]
- RC:Reinforced Cap

Note : 1. The roman numerals representing the number of rails used in one axis.
As for the single rail in an axis, it shows no symbol.
2. For dust protection, it is no symbol if it is standard (end seal and bottom seal).
ZZ : End seal, bottom seal and scraper.
KK : Double seals, bottom seal and scraper.
DD : Double seals and bottom seal.

(2) Interchangeable type

- Model Number of QE Block

QE W 25 C A E ZA P + KK

- QE Series
- Block Type
  W : Flange Type
  H : Square Type
- Model size
  15, 20, 25, 30, 35
- Load Type
  C : Heavy Load
  S : Medium Load
- Block Mounting Type
  A : Mounting From Top
  B : Bottom
- E: Special Block
  None: Standard Block
- Preload Code : Z0, ZA
- Precision Code : C, H, P
- Dust Protection[2]

- Model Number of QE Rail (QE and EG share the identical rails)

EG R 25 R 1600 E P + RC

- QE/EG Series
- Interchangeable Rail
- Model size
  15, 20, 25, 30, 35
- Rail Mounting Type
  R/U : Mounting From Top
  T : Bottom
- Rail Length (mm)
- E: Special Rail, None: Standard Rail
- Precision Code : C, H, P
- RC:Reinforced Cap

2-6-3 Types

(1) Block types

HIWIN offers two types of linear guideways, flange and square types.

Table 2-6-1 **Block Type**

Type	Model	Shape	Height (mm)	Rail Length (mm)	Main Applications
Square	QEH-SA QEH-CA	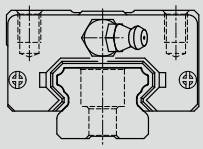	24 ↓ 48	100 ↓ 4000	○ Automation devices ○ High-speed transportation equipment ○ Precision measuring equipment ○ Semiconductor manufacturing equipment
Flange	QEW-SA QEW-CA	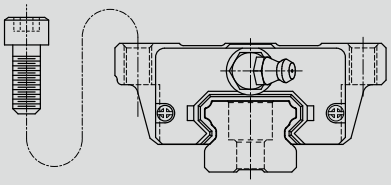	24 ↓ 48	100 ↓ 4000	
	QEW-SB QEW-CB	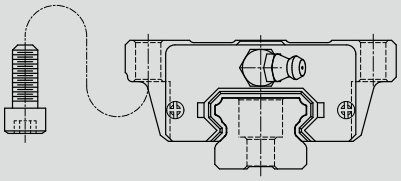	24 ↓ 48	100 ↓ 4000	

(2) Rail types

Besides the standard top mounting type, the bottom mounting type is also available.

Table 2-6-2 **Rail Types**

Mounting from Top	Mounting from bottom
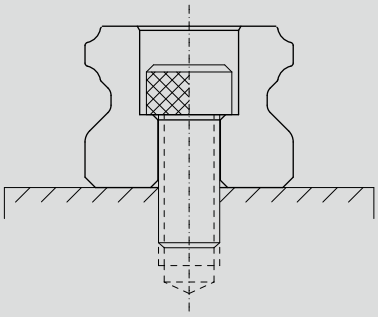	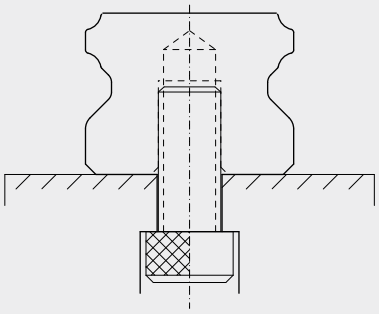

QE Series

Low Profile

2-6-4 Accuracy

The accuracy of the QE series can be classified into 5 classes: normal(C), high(H), precision(P), super precision(SP), and ultra precision(UP). Choose the class by referencing the accuracy of selected equipment.

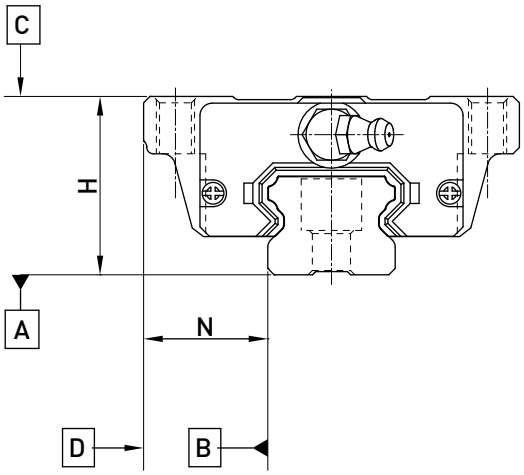

(1) Accuracy of non-interchangeable guideways

Table 2-6-3 **Accuracy Standards** Unit: mm

Item	QE - 15, 20				
Accuracy Classes	Normal (C)	High (H)	Precision (P)	Super Precision (SP)	Ultra Precision (UP)
Dimensional tolerance of height H	± 0.1	± 0.03	0 - 0.03	0 - 0.015	0 - 0.008
Dimensional tolerance of width N	± 0.1	± 0.03	0 - 0.03	0 - 0.015	0 - 0.008
Variation of height H	0.02	0.01	0.006	0.004	0.003
Variation of width N	0.02	0.01	0.006	0.004	0.003
Running parallelism of block surface C to surface A	See Table 2-6-7				
Running parallelism of block surface D to surface B	See Table 2-6-7				

Table 2-6-4 **Accuracy Standards** Unit: mm

Item	QE - 25, 30, 35				
Accuracy Classes	Normal (C)	High (H)	Precision (P)	Super Precision (SP)	Ultra Precision (UP)
Dimensional tolerance of height H	± 0.1	± 0.04	0 - 0.04	0 - 0.02	0 - 0.01
Dimensional tolerance of width N	± 0.1	± 0.04	0 - 0.04	0 - 0.02	0 - 0.01
Variation of height H	0.02	0.015	0.007	0.005	0.003
Variation of width N	0.03	0.015	0.007	0.005	0.003
Running parallelism of block surface C to surface A	See Table 2-6-7				
Running parallelism of block surface D to surface B	See Table 2-6-7				

(2) Accuracy of interchangeable guideways

Table 2-6-5 **Accuracy Standards**

Unit: mm

Item	QE - 15, 20		
Accuracy Classes	Normal (C)	High (H)	Precision (P)
Dimensional tolerance of height H	± 0.1	± 0.03	± 0.015
Dimensional tolerance of width N	± 0.1	± 0.03	± 0.015
Variation of height H	0.02	0.01	0.006
Variation of width N	0.02	0.01	0.006
Running parallelism of block surface C to surface A	See Table 2-6-7		
Running parallelism of block surface D to surface B	See Table 2-6-7		

Table 2-6-6 **Accuracy Standards**

Unit: mm

Item	QE - 25, 30, 35		
Accuracy Classes	Normal (C)	High (H)	Precision (P)
Dimensional tolerance of height H	± 0.1	± 0.04	± 0.02
Dimensional tolerance of width N	± 0.1	± 0.04	± 0.02
Variation of height H	0.02	0.015	0.007
Variation of width N	0.03	0.015	0.007
Running parallelism of block surface C to surface A	See Table 2-6-7		
Running parallelism of block surface D to surface B	See Table 2-6-7		

(3) Accuracy of running parallelism

Table 2-6-7 **Accuracy of Running Parallelism**

Rail Length (mm)	Accuracy (μm)				
	C	H	P	SP	UP
~ 100	12	7	3	2	2
100 ~ 200	14	9	4	2	2
200 ~ 300	15	10	5	3	2
300 ~ 500	17	12	6	3	2
500 ~ 700	20	13	7	4	2
700 ~ 900	22	15	8	5	3
900 ~ 1,100	24	16	9	6	3
1,100 ~ 1,500	26	18	11	7	4
1,500 ~ 1,900	28	20	13	8	4
1,900 ~ 2,500	31	22	15	10	5
2,500 ~ 3,100	33	25	18	11	6
3,100 ~ 3,600	36	27	20	14	7
3,600 ~ 4,000	37	28	21	15	7

QE Series

Low Profile

2-6-5 Preload

(1) Definition

A preload can be applied to each guideway. Generally, a linear motion guideway has a negative clearance between the groove and balls in order to improve stiffness and maintain high precision. The figure shows that adding a preload can improve stiffness of the linear guideway. A preload no greater than ZA would be recommended for model sizes smaller than QE20. This will avoid an over-loaded condition that would affect guideway life.

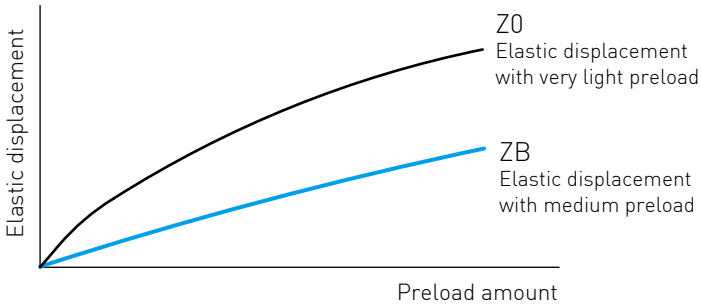

(2) Preload classes

HIWIN offers three standard preloads for various applications and conditions.

Table 2-6-8 **Preload Classes**

Class	Code	Preload	Condition
Very Light Preload	Z0	0~ 0.02C	Certain load direction,low impact, low precision required
Light Preload	ZA	0.03C~0.05C	low load and high precision required
Medium Preload	ZB	0.06C~ 0.08C	High rigidity required, with vibration and impact

Class	Interchangeable Guideway	Non-Interchangeable Guideway
Preload classes	Z0, ZA	Z0, ZA, ZB

Note: The "C" in the preload column denotes basic dynamic load rating.

2-6-6 Mounting location

The standard location of the grease fitting is at both ends of the block, the nipple may be mounted in the side or top of the block. For lateral installation, we recommend that the nipple be mounted to the non-reference side, otherwise please contact us. When lubricating from above, in the recess for the O-ring, a smaller, preformed recess can be found. Preheat the 0.8 mm diameter metal tip. Carefully open the small recess with the metal tip and pierce through it. Insert a round sealing ring into the recess. (The round sealing ring is not supplied with the block) Do not open the small recess with a drill bit this may introduce the danger of contamination. It is possible to carry out the lubrication by using the oil-piping joint.

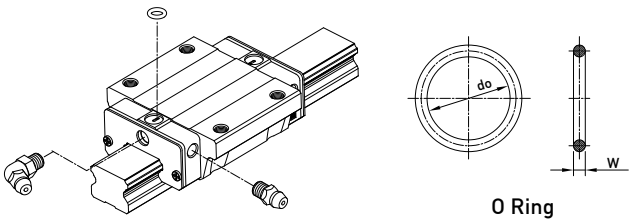

Table 2-6-9 **O-Ring size and max. permissible depth for piercing**

Size	O-Ring		Lube hole at top: max. permissible depth for piercing
	do(mm)	W (mm)	T_{max}(mm)
QE 15	2.5±0.15	1.5±0.15	5.3
QE 20	4.5±0.15	1.5±0.15	5.8
QE 25	3±0.15	2.5±0.15	7
QE 30	4.5±0.15	1.5±0.15	7.8
QE 35	4.5±0.15	1.5±0.15	8.3

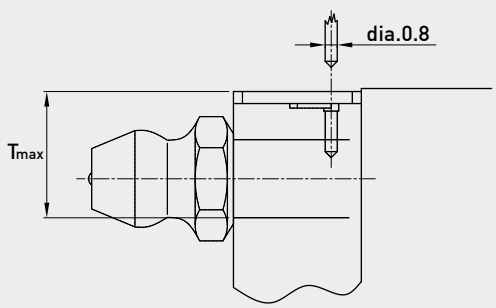

2-6-7 Dust Protection Equipment

(1) Codes of equipment

If the following equipment is needed, please indicate the code followed by the model number.

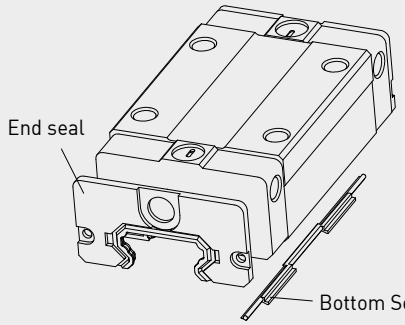

No symbol: Standard Protection (End seal + Bottom seal)

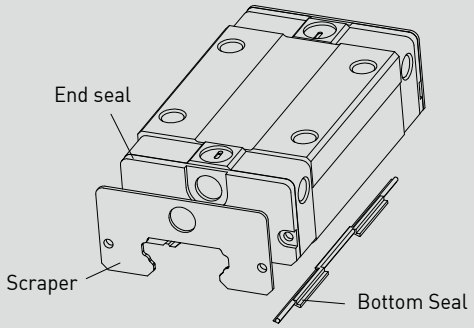

ZZ(End seal + Bottom seal + Scraper)

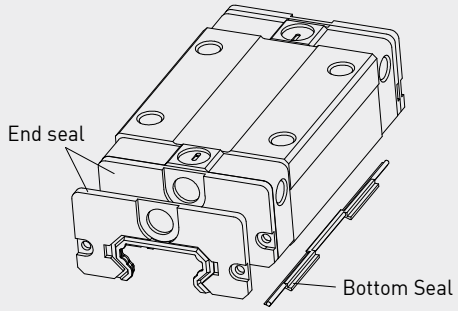

DD (Double seals + Bottom Seal)

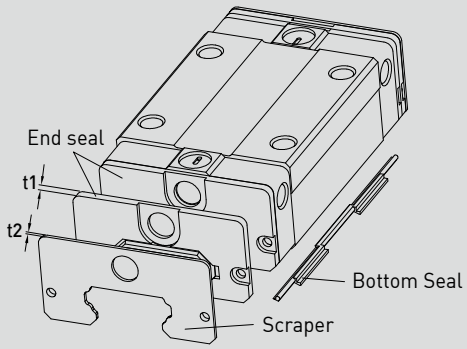

KK (Double seals + Bottom Seal + Scraper)

(2) End seal and bottom seal

To prevent life reduction caused by iron chips or dust entering the block.

(3) Double seals

Removes foreign matter from the rail preventing contaminants from entering the block.

Table 2-6-10 **Dimensions of end seal**

Size	Thickness (t1) (mm)	Size	Thickness (t1) (mm)
QE15 ES	2	QE30 ES	2.5
QE20 ES	2	QE35 ES	2
QE25 ES	2.5		

(4) Scraper

Clears larger contaminants, such as weld spatter and metal cuttings, from the rail. Metal scraper protects end seals from excessive damage.

Table 2-6-11 **Dimensions of Scraper**

Size	Thickness (t2) (mm)	Size	Thickness (t2) (mm)
QE15 SC	1	QE30 SC	1
QE20 SC	1	QE35 SC	1.5
QE25 SC	1		

QE Series

Low Profile

(5) Dimensions of block equipped with the dustproof parts

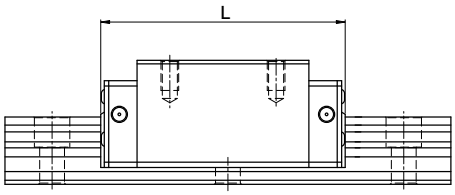

Table 2-6-12 **Overall block length**

unit: mm

Size	Overall block length (L)			
	SS	ZZ	DD	KK
QE15S	40.1 (42.9)	42.1 (46.5)	44.1 (46.9)	46.1 (50.5)
QE15C	56.8 (59.6)	58.8 (63.2)	60.8 (63.6)	62.8 (67.2)
QE20S	50.0 (54.0)	52.0 (58.0)	54.0 (58.0)	56.0 (62.0)
QE20C	69.1 (73.1)	71.1 (77.1)	73.1 (77.1)	75.1 (81.1)
QE25S	60.1 (63.5)	62.1 (68.1)	65.1 (68.5)	67.1 (73.1)
QE25C	83.6 (87.0)	85.6 (91.6)	88.6 (92.0)	90.6 (96.6)
QE30S	67.5 (71.3)	69.5 (75.5)	72.5 (76.3)	74.5 (80.5)
QE30C	96.1 (99.9)	98.1 (104.1)	101.1 (104.9)	103.1 (109.1)
QE35S	76.0 (80.0)	79.0 (85.0)	80.0 (84.0)	83.0 (89.0)
QE35C	108.0 (112)	111.0 (117.0)	112.0 (116.0)	115.0 (121.0)

Note : The marking of "( )" denotes the maximum block length with screws, lips of end seals, etc.

2-6-8 Friction

The maximum value of resistance per end seal are as shown in the table.

Table 2-6-13 **Seal Resistance**

Size	Resistance N (kgf)	Size	Resistance N (kgf)
QE15	1.08 (0.11)	QE30	2.06 (0.21)
QE20	1.37 (0.14)	QE35	2.26 (0.23)
QE25	1.67 (0.17)		

Note:1kgf=9.81N

2-6-9 Mounting Surface Accuracy Tolerance

Because of the circular-arc contact design, the QE linear guideway can withstand surface-error installation and deliver smooth linear motion. When the mounting surface meets the accuracy requirements of the installation, the high accuracy and rigidity of the guideway will be obtained without any difficulty. For faster installation and smoother movement, HIWIN offers a preload with normal clearance because of its ability to absorb higher deviations in mounting surface inaccuracies.

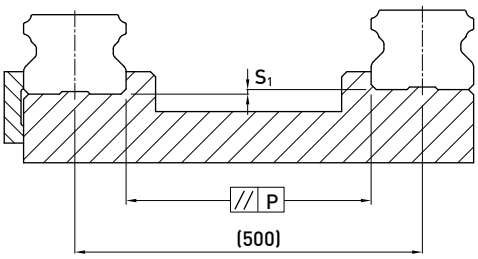

Table 2-6-14 **Max. Parallelism Tolerance (P)**

unit: μm

Size	Preload classes			Size	Preload classes		
	Z0	ZA	ZB		Z0	ZA	ZB
QE15	25	18	-	QE30	40	30	27
QE20	25	20	18	QE35	50	35	30
QE25	30	22	20				

Table 2-6-15 **Max. Tolerance of Reference Surface Height (S_1)**

unit: μm

Size	Preload classes			Size	Preload classes		
	Z0	ZA	ZB		Z0	ZA	ZB
QE15	130	85	-	QE30	170	110	90
QE20	130	85	50	QE35	210	150	120
QE25	130	85	70				

Note: The allowable value is proportional to the distance between the axes.

2-6-10 Cautions for Installation

(1) Shoulder heights and chamfers

Improper shoulder heights and fillets of mounting surfaces will cause a deviation in accuracy and the interference with the rail or block. As long as the recommended shoulder heights and fillets are followed, installation inaccuracies should be eliminated.

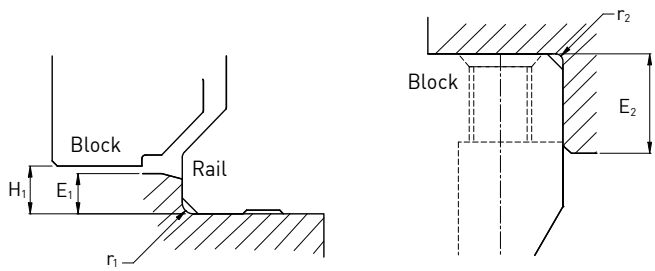

Table 2-6-16 **Shoulder Heights and Chamfers**

unit: mm

Size	Max. radius of fillets r_1 (mm)	Max. radius of fillets r_2 (mm)	Shoulder height beside the rail E_1 (mm)	Shoulder height beside the block E_2 (mm)	Clearance under block H_1 (mm)
QE15	0.5	0.5	2.7	5.0	4.0
QE20	0.5	0.5	5.0	7.0	6.0
QE25	1.0	1.0	5.0	7.5	6.2
QE30	1.0	1.0	7.0	7.0	10.0
QE35	1.0	1.5	7.5	9.5	11.0

(2) Tightening Torque of Bolts for Installation

Improperly tightened mounting bolts will seriously affect the accuracy of linear guide installations. The following tightening torques for different sizes of bolts are recommended.

Table 2-6-17 **Tightening Torque**

Size	Bolt size	Torque N-cm(kgf-cm)		
		Iron	Casting	Aluminum
QE15	M3×0.5P×16L	186 (19)	127 (13)	98(10)
QE20	M5×0.8P×16L	883 (90)	588 (60)	441 (45)
QE25	M6×1P×20L	1373 (140)	921 (94)	686 (70)
QE30	M6×1P×25L	1373 (140)	921 (94)	686 (70)
QE35	M8×1.25P×25L	3041 (310)	2010 (205)	1470 (150)

Note: 1 kgf = 9.81 N

QE Series

Low Profile

2-6-11 Dimensions for HIWIN QE Series

(1) QEH-CA / QEH-SA

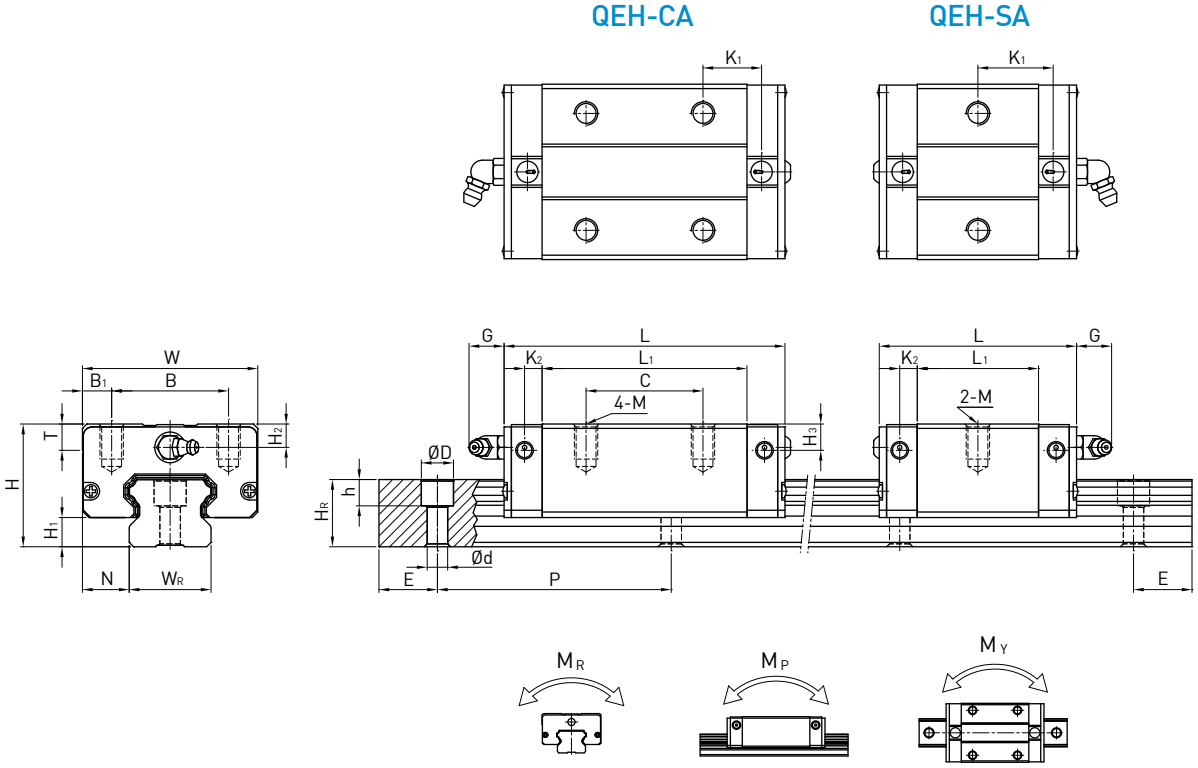

Model No.	Dimensions of Assembly (mm)			Dimensions of Block (mm)													Dimensions of Rail (mm)							Mounting Bolt for Rail	Basic Dynamic Load Rating	Basic Static Load Rating	Static Rated Moment			Weight	
	H	H_1	N	W	B	B_1	C	L_1	L	K_1	K_2	G	Mxl	T	H_2	H_3	W_R	H_R	D	h	d	P	E	(mm)	C(kN)	C_0 (kN)	M_R kN-m	M_P kN-m	M_Y kN-m	Block kg	Rail kg/m
QEH15SA	24	4	9.5	34	26	4	-	23.1	40.1	14.8	3.5	5.7	M4x6	6	5.5	6	15	12.5	6	4.5	3.5	60	20	M3x16	8.56	8.79	0.07	0.03	0.03	0.09	1.25
QEH15CA							26	39.8	56.8	10.15															12.53	15.28	0.12	0.09	0.09	0.15	
QEH20SA	28	6	11	42	32	5	-	29	50	18.75	4.15	12	M5x7	7.5	6	6.5	20	15.5	9.5	8.5	6	60	20	M5x16	11.57	12.18	0.13	0.05	0.05	0.15	2.08
QEH20CA							32	48.1	69.1	12.3															16.50	20.21	0.21	0.15	0.15	0.23	
QEH25SA	33	6.2	12.5	48	35	6.5	-	35.5	60.1	21.9	5	12	M6x9	8	8	8	23	18	11	9	7	60	20	M6x20	18.24	18.90	0.22	0.10	0.10	0.24	2.67
QEH25CA							35	59	83.6	16.15															26.03	31.49	0.37	0.29	0.29	0.40	
QEH30SA	42	10	16	60	40	10	-	41.5	67.5	25.75	6	12	M8x12	9	8	9	28	23	11	9	7	80	20	M6x25	26.27	27.82	0.40	0.18	0.18	0.44	4.35
QEH30CA							40	70.1	96.1	20.05															37.92	46.63	0.67	0.51	0.51	0.75	
QEH35SA	48	11	18	70	50	10	-	51	76	30.3	6.25	12	M8x12	10	8.5	8.5	34	27.5	14	12	9	80	20	M8x25	36.39	36.43	0.61	0.33	0.33	0.77	6.14
QEH35CA							50	83	108	21.3															51.18	59.28	1.00	0.75	0.75	1.19	

Note : 1 kgf = 9.81 N

(2) QEW-CA / QEW-SA

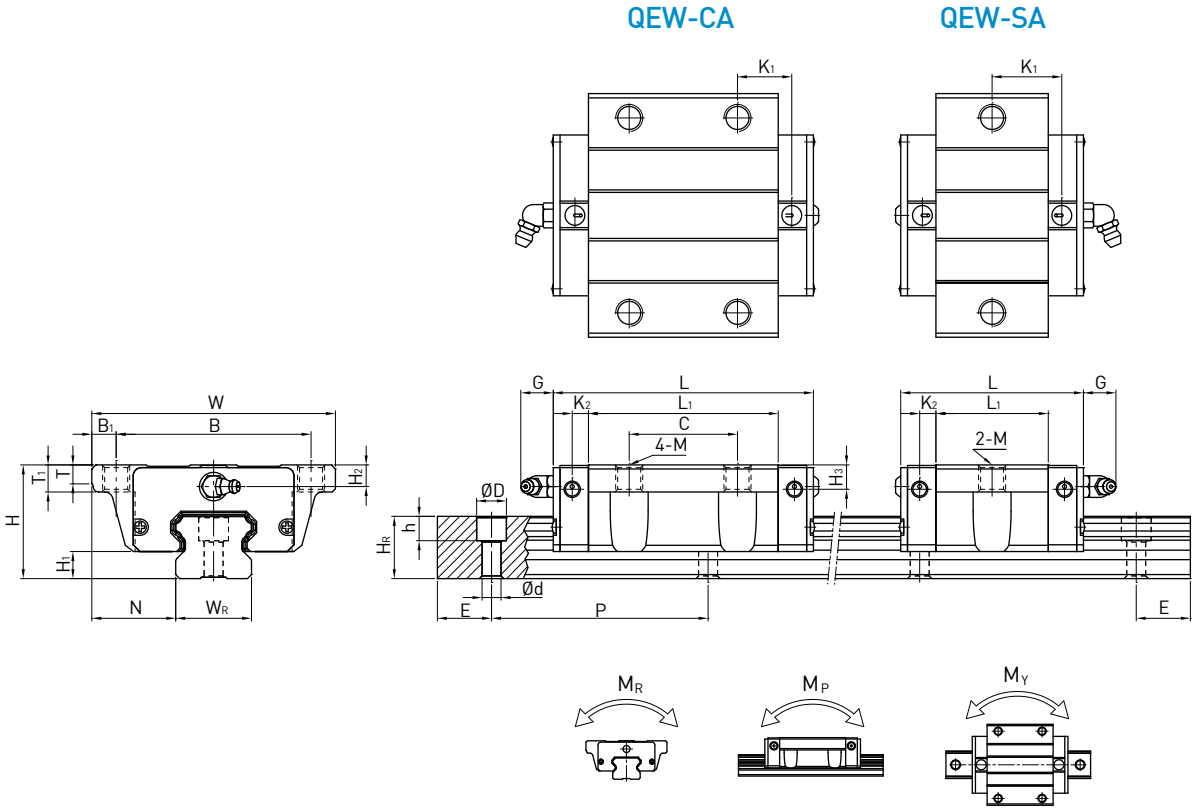

Model No.	Dimensions of Assembly (mm)			Dimensions of Block (mm)														Dimensions of Rail (mm)							Mounting Bolt for Rail	Basic Dynamic Load Rating	Basic Static Load Rating	Static Rated Moment			Weight	
	H	H_1	N	W	B	B_1	C	L_1	L	K_1	K_2	G	M	T	T_1	H_2	H_3	W_R	H_R	D	h	d	P	E	(mm)	C(kN)	C_0 (kN)	M_R kN-m	M_P kN-m	M_Y kN-m	Block kg	Rail kg/m
QEW15SA	24	4	18.5	52	41	5.5	-	23.1	40.1	14.8	3.5	5.7	M5	5	7	5.5	6	15	12.5	6	4.5	3.5	60	20	M3×16	8.56	8.79	0.07	0.03	0.03	0.12	1.25
QEW15CA							26	39.8	56.8	10.15																12.53	15.28	0.12	0.09	0.09	0.21	
QEW20SA	28	6	19.5	59	49	5	-	29	50	18.75	4.15	12	M6	7	9	6	6.5	20	15.5	9.5	8.5	6	60	20	M5×16	11.57	12.18	0.13	0.05	0.05	0.19	2.08
QEW20CA							32	48.1	69.1	12.3																16.50	20.21	0.21	0.15	0.15	0.31	
QEW25SA	33	6.2	25	73	60	6.5	-	35.5	60.1	21.9	5	12	M8	7.5	10	8	8	23	18	11	9	7	60	20	M6×20	18.24	18.90	0.22	0.10	0.10	0.34	2.67
QEW25CA							35	59	83.6	16.15																26.03	31.49	0.37	0.29	0.29	0.58	
QEW30SA	42	10	31	90	72	9	-	41.5	67.5	25.75	6	12	M10	7	10	8	9	28	23	11	9	7	80	20	M6×25	26.27	27.82	0.40	0.18	0.18	0.61	4.35
QEW30CA							40	70.1	96.1	20.05																37.92	46.63	0.67	0.51	0.51	1.03	
QEW35SA	48	11	33	100	82	9	-	51	76	30.3	6.25	12	M10	10	13	8.5	8.5	34	27.5	14	12	9	80	20	M8×25	36.39	36.43	0.61	0.33	0.33	0.77	6.14
QEW35CA							50	83	108	21.3																51.18	59.28	1.00	0.75	0.75	1.19	

Note : 1 kgf = 9.81 N

QE Series

Low Profile

(3) QEW-CB / QEW-SB

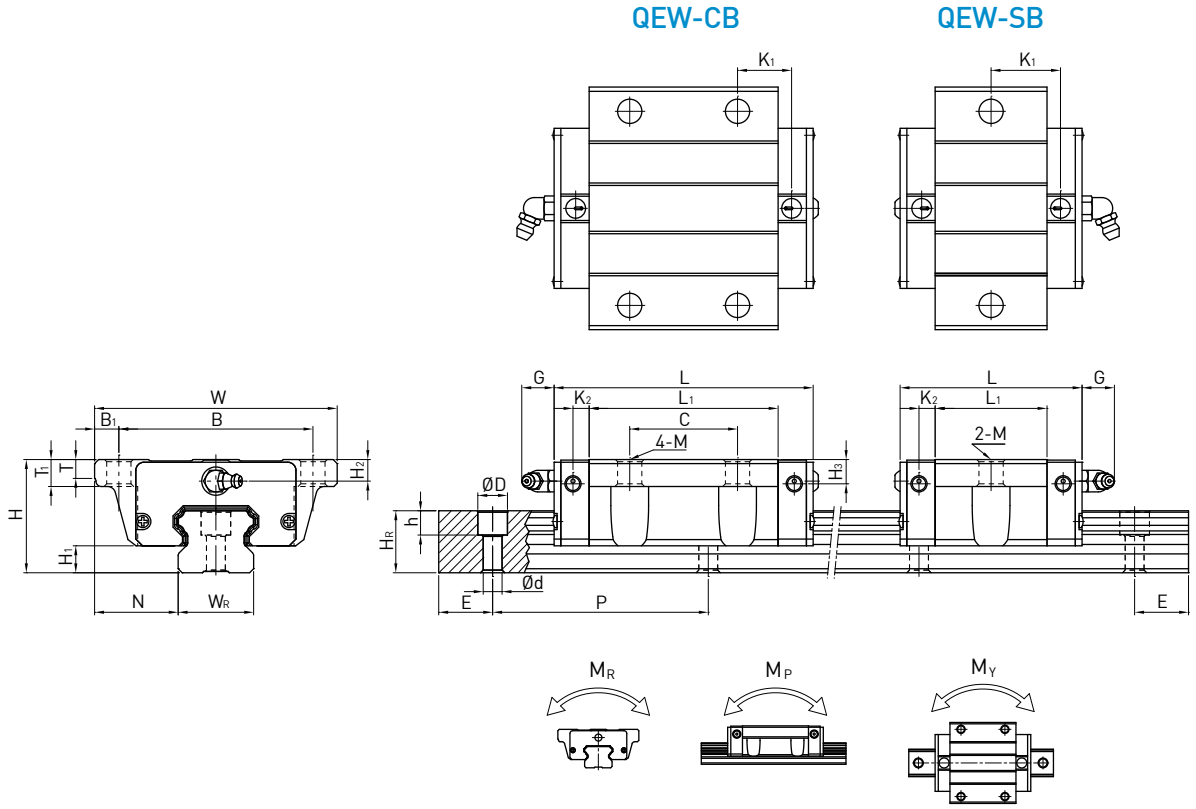

Model No.	Dimensions of Assembly (mm)			Dimensions of Block (mm)														Dimensions of Rail (mm)							Mounting Bolt for Rail	Basic Dynamic Load Rating	Basic Static Load Rating	Static Rated Moment			Weight	
	H	H_1	N	W	B	B_1	C	L_1	L	K_1	K_2	G	M	T	T_1	H_2	H_3	W_R	H_R	D	h	d	P	E	(mm)	C(kN)	C_0 (kN)	M_R kN-m	M_P kN-m	M_Y kN-m	Block kg	Rail kg/m
QEW15SB	24	4	18.5	52	41	5.5	-	23.1	40.1	14.8	3.5	5.7	Ø4.5	5	7	5.5	6	15	12.5	6	4.5	3.5	60	20	M3x16	8.56	8.79	0.07	0.03	0.03	0.12	1.25
QEW15CB							26	39.8	56.8	10.15																12.53	15.28	0.12	0.09	0.09	0.21	
QEW20SB	28	6	19.5	59	49	5	-	29	50	18.75	4.15	12	Ø5.5	7	9	6	6.5	20	15.5	9.5	8.5	6	60	20	M5x16	11.57	12.18	0.13	0.05	0.05	0.19	2.08
QEW20CB							32	48.1	69.1	12.3																16.50	20.21	0.21	0.15	0.15	0.31	
QEW25SB	33	6.2	25	73	60	6.5	-	35.5	60.1	21.9	5	12	Ø7	7.5	10	8	8	23	18	11	9	7	60	20	M6x20	18.24	18.90	0.22	0.10	0.10	0.34	2.67
QEW25CB							35	59	83.6	16.15																26.03	31.49	0.37	0.29	0.29	0.58	
QEW30SB	42	10	31	90	72	9	-	41.5	67.5	25.75	6	12	Ø9	7	10	8	9	28	23	11	9	7	80	20	M6x25	26.27	27.82	0.40	0.18	0.18	0.61	4.35
QEW30CB							40	70.1	96.1	20.05																37.92	46.63	0.67	0.51	0.51	1.03	
QEW35SB	48	11	33	100	82	9	-	51	76	30.3	6.25	12	Ø9	10	13	8.5	8.5	34	27.5	14	12	9	80	20	M8x25	36.39	36.43	0.61	0.33	0.33	0.77	6.14
QEW35CB							50	83	108	21.3																51.18	59.28	1.00	0.75	0.75	1.19	

Note : 1 kgf = 9.81 N

2-7 QW Series - Wide Rail Linear Guideway, with SynchMotion® Technology

2-7-1 Features

The QW series linear guideway with SynchMotion® Technology possesses all the advantages of the WE series, which features high moment rigidity and is suitable for single rail or space saving applications. With the SynchMotion® technology it also provides quieter and smoother movement, superior lubrication, and longer service life.

2-7-2 Construction

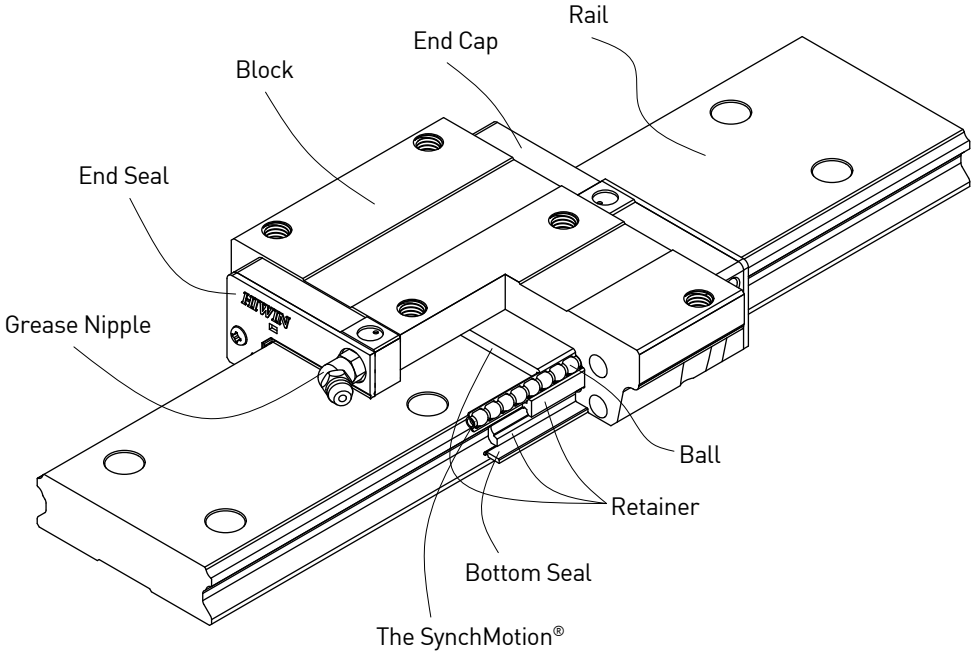

2-7-3 Model Number of QW Series

QW series guideway can be classified into non-interchangeable and interchangeable types. The sizes are identical. The main difference is that the interchangeable blocks and rails can be freely exchanged. Because of dimensional control, the interchangeable type linear guideway is a perfect choice for the client when rails do not need to be paired for an axis. And since the QW and WE share the identical rails, the customer does not need to redesign when choosing the QW series. Therefore the QW linear guideway has increased applicability.

QW Series

Wide Rail

(1) Non-interchangeable type

QW W 27 C C E 2 R 1600 E ZA P II + KK+RC

- QW Series
- Block Type
  W : Flange Type
  H : Square Type
- Model size
  17, 21, 27, 35
- Load Type
  C : Heavy Load
- Block Mounting Type
  A : Mounting From Top
  C : Top or Bottom
- E: Special Block
  None: Standard Block
- No. of Blocks per Rail
- Rail Mounting Type
  R : Mounting From Top
  T : Bottom
- Rail Length (mm)
- E: Special Rail
  None: Standard rail
- Preload Code: Z0, ZA, ZB
- Precision Code:
  C, H, P, SP, UP
- NO. of Rail per Axis set [1]
- Dust Protection[2]
- RC:Reinforced Cap

Note: 1. The roman numerals are used to express the number of matched rails used in one axis. When a single rail is used in an axis, no symbol is indicated.
2. No symbol indicates standard protection (end seal and bottom seal).
ZZ : End seal, bottom seal and scraper
KK: Double seals, bottom seal and scraper.
DD: Double seals and bottom seal

(2) Interchangeable type

- Model Number of QW Block

QW W 27 C C E ZA P + KK

- QW Series
- Block Type
  W : Flange Type
  H : Square Type
- Model size
  17, 21, 27, 35
- Load Type
  C : Heavy Load
- Block Mounting Type
  A : Mounting From Top
  C : Top or Bottom
- E: Special Block
  None: Standard block
- Preload Code : Z0, ZA
- Precision Code : C, H, P
- Dust Protection[2]

- Model Number of QW Rail (QW and WE share the identical rails)

WE R 27 R 1600 E P + RC

- QW/WE Series
- Interchangeable Rail
- Model size
  17, 21, 27, 35
- Rail Mounting Type
  R : Mounting From Top
  T : Bottom
- Rail Length (mm)
- E : Special Rail,
  None : Standard Rail
- Precision Code : C, H, P
- RC : Reinforced Cap

2-7-4 Types

(1) Block types

HIWIN offers two types of linear guideways, flange and square types.

Table 2-7-1 **Block Types**

Type	Model	Shape	Height (mm)	Rail Length (mm)	Main Applications
Square	QWH-CA	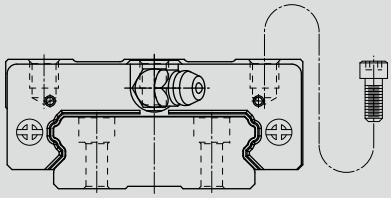	17 ↓ 35	100 ↓ 4000	Automation devices High-speed transportation equipment Precision measuring equipment Semiconductor manufacturing equipment
Flange	QWW-CC	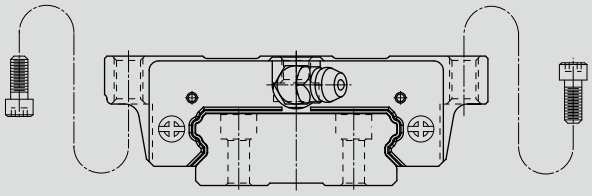	17 ↓ 35	100 ↓ 4000	

(2) Rail types

Besides the standard top mounting type, HIWIN also offers bottom mounting type rails.

Table 2-7-2 **Rail Types**

Mounting from Top	Mounting from Bottom
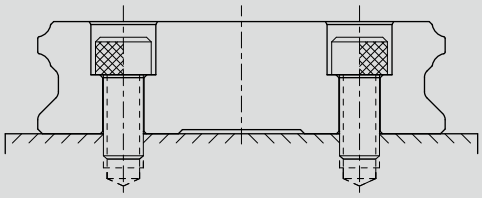	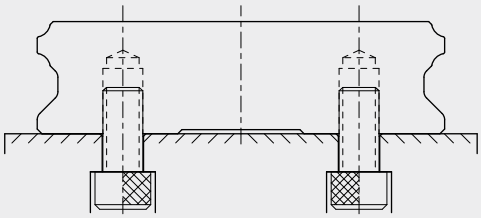

QW Series

Wide Rail

2-7-5 Accuracy

The accuracy of the QW series can be classified into 5 classes: normal(C), high(H), precision(P), super precision(SP), and ultra precision(UP). Choose the class by referencing the accuracy of selected equipment.

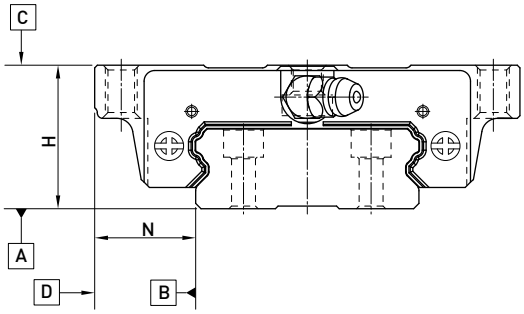

(1) Accuracy of non-interchangeable guideways

Table 2-7-3 **Accuracy Standards** Unit: mm

Type	QW - 17, 21					QW - 27, 35				
Accuracy Classes	Normal (C)	High (H)	Precision (P)	Super Precision (SP)	Ultra Precision (UP)	Normal (C)	High (H)	Precision (P)	Super Precision (SP)	Ultra Precision (UP)
Dimensional tolerance of height H	± 0.1	± 0.03	0 - 0.03	0 - 0.015	0 - 0.008	± 0.1	± 0.04	0 - 0.04	0 - 0.02	0 - 0.01
Dimensional tolerance of width N	± 0.1	± 0.03	0 - 0.03	0 - 0.015	0 - 0.008	± 0.1	± 0.04	0 - 0.04	0 - 0.02	0 - 0.01
Variation of height H	0.02	0.01	0.006	0.004	0.003	0.02	0.015	0.007	0.005	0.003
Variation of width N	0.02	0.01	0.006	0.004	0.003	0.03	0.015	0.007	0.005	0.003
Running parallelism of block surface C to surface A	See Table 2-7-5									
Running parallelism of block surface D to surface B	See Table 2-7-5									

(2) Accuracy of interchangeable guideways

Table 2-7-4 **Accuracy Standards** Unit: mm

Item	QW - 17, 21			QW - 27, 35		
Accuracy Classes	Normal (C)	High (H)	Precision (P)	Normal (C)	High (H)	Precision (P)
Dimensional tolerance of height H	± 0.1	± 0.03	± 0.015	± 0.1	± 0.04	± 0.02
Dimensional tolerance of width N	± 0.1	± 0.03	± 0.015	± 0.1	± 0.04	± 0.02
Variation of height H	0.02	0.01	0.006	0.02	0.015	0.007
Variation of width N	0.02	0.01	0.006	0.03	0.015	0.007
Running parallelism of block surface C to surface A	See Table 2-7-5					
Running parallelism of block surface D to surface B	See Table 2-7-5					

(3) Accuracy of running parallelism

Table 2-7-5 **Accuracy of Running Parallelism**

Rail Length (mm)	Accuracy (μm)				
	C	H	P	SP	UP
~ 100	12	7	3	2	2
100 ~ 200	14	9	4	2	2
200 ~ 300	15	10	5	3	2
300 ~ 500	17	12	6	3	2
500 ~ 700	20	13	7	4	2
700 ~ 900	22	15	8	5	3
900 ~ 1,100	24	16	9	6	3
1,100 ~ 1,500	26	18	11	7	4
1,500 ~ 1,900	28	20	13	8	4
1,900 ~ 2,500	31	22	15	10	5
2,500 ~ 3,100	33	25	18	11	6
3,100 ~ 3,600	36	27	20	14	7
3,600 ~ 4,000	37	28	21	15	7

2-7-6 Preload

(1) Definition

A preload can be applied to each guideway. Generally, a linear motion guideway has a negative clearance between the groove and balls in order to improve stiffness and maintain high precision. The figure shows that adding a preload can improve stiffness of the linear guideway.

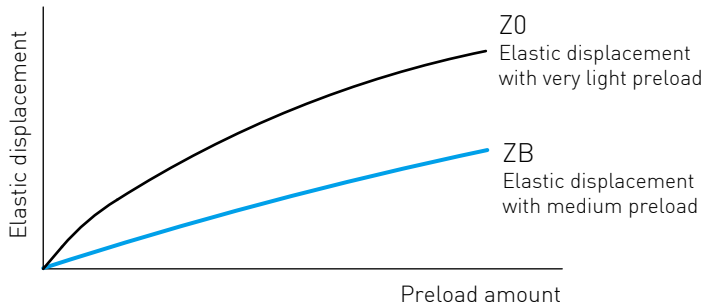

(2) Preload classes

HIWIN offers three standard preloads for various applications and conditions.

Table 2-7-6 **Preload Classes**

Class	Code	Preload	Condition
Very Light Preload	Z0	0~ 0.02C	Certain load direction,low impact, low precision requirement
Light Preload	ZA	0.03C~0.05C	low load and high precision requirement
Medium Preload	ZB	0.06C~ 0.08C	High rigidity requirement, with vibration and impact

Class	Interchangeable Guideway	Non-Interchangeable Guideway
Preload classes	Z0, ZA	Z0, ZA, ZB

Note: The "C" in the preload column denotes basic dynamic load rating.

2-7-7 Mounting location

The standard location of the grease fitting is at both ends of the block, the nipple may be mounted in the side or top of the block. For lateral installation, we recommend that the nipple be mounted to the non-reference side, otherwise please contact us. When lubricating from above, in the recess for the O-ring, a smaller, preformed recess can be found. Preheat the 0.8 mm diameter metal tip. Carefully open the small recess with the metal tip and pierce through it. Insert a round sealing ring into the recess. (The round sealing ring is not supplied with the block) Do not open the small recess with a drill bit this may introduce the danger of contamination. It is possible to carry out the lubrication by using the oil-piping joint.

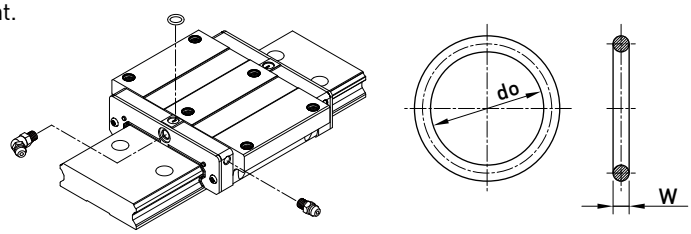

O Ring

Table 2-7-7 **O-Ring size and max. permissible depth for piercing**

Size	O-Ring		Lube hole at top: max. permissible depth for piercing
	do(mm)	W (mm)	T_{max} (mm)
QW 21	2.5±0.15	1.5±0.15	4.2
QW 27	2.5±0.15	1.5±0.15	5.7
QW 35	4.5±0.15	1.5±0.15	7.6

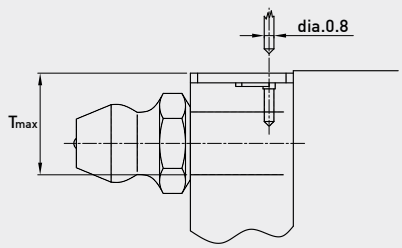

2-7-8 Dust Protection Equipment

(1) Codes of equipment

If the following equipment is needed, please indicate the code followed by the model number.

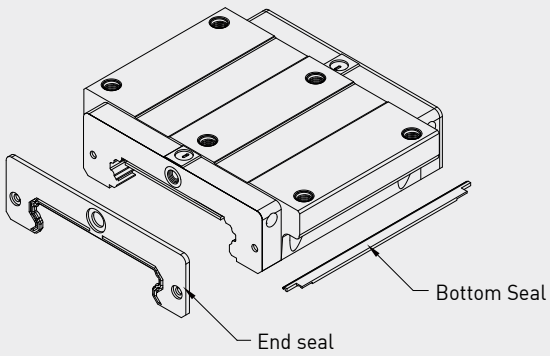

No symbol: Standard Protection (End seal + Bottom seal)

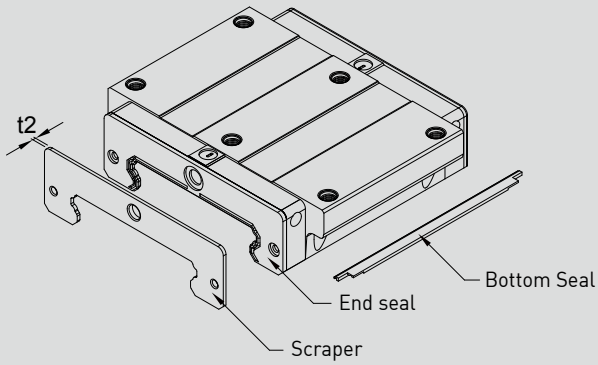

ZZ(End seal + Bottom seal + Scraper)

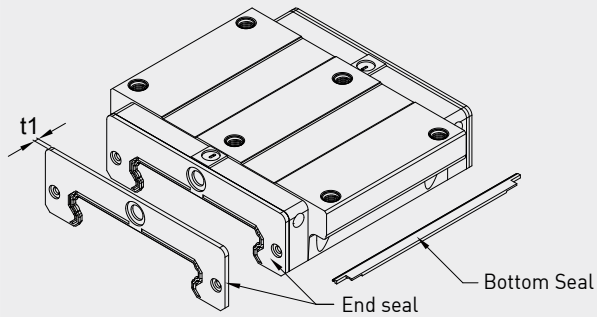

DD (Double seals + Bottom Seal)

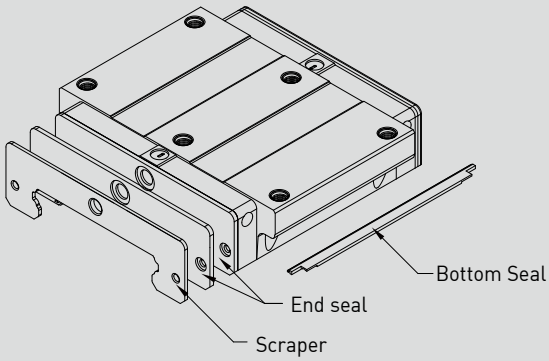

KK (Double seals + Bottom Seal + Scraper)

(2) End seal and bottom seal

Protects against contaminants entering the block. Reduces potential for groove damage resulting in a reduction of life ratings.

(3) Double seals

Removes foreign matter from the rail preventing contaminants from entering the block.

Table 2-7-8 **Dimensions of end seal**

Size	Thickness (t1) (mm)	Size	Thickness (t1) (mm)
QW17	1.6	QW27	2
QW21	2	QW35	2

(4) Scraper

Clears larger contaminants, such as weld spatter and metal cuttings, from the rail. Metal scraper protects end seals from excessive damage.

Table 2-7-9 **Dimensions of Scraper**

Size	Thickness (t2) (mm)	Size	Thickness (t2) (mm)
QW17	1	QW27	1
QW21	1	QW35	1.5

(5) Dimensions of block equipped with the dustproof parts

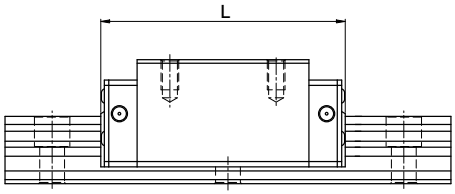

Table 2-7-10 **Overall block length**

unit: mm

Size	Overall block length (L)			
	SS	ZZ	DD	KK
QW17C	51.0 (53.0)	53.0 (56.0)	54.2 (56.2)	56.2 (59.2)
QW21C	59.0 (63.0)	61.0 (67.0)	63.0 (67.0)	65.0 (71.0)
QW27C	73.2 (77.2)	75.2 (81.2)	77.2 (81.2)	79.2 (85.2)
QW35C	107.0 (111.0)	110.0 (116.0)	111.0 (115.0)	114.0 (120.0)

Note : The marking of "( )" denotes the maximum block length with screws, lips of end seals, etc.

2-7-9 Friction

The maximum value of resistance per end seal are as shown in the table.

Table 2-7-11 **Seal Resistance**

Size	Resistance N (kgf)	Size	Resistance N (kgf)
QW17	1.18 (0.12)	QW27	2.94 (0.3)
QW21	1.96 (0.2)	QW35	3.92 (0.4)

Note:1kgf=9.81N

QW Series

Wide Rail

2-7-10 Mounting Surface Accuracy Tolerance

Because of the circular-arc contact design, the QW linear guideway can withstand surface-error installation and deliver smooth linear motion. When the mounting surface meets the accuracy requirements of the installation, the high accuracy and rigidity of the guideway will be obtained without any difficulty. For faster installation and smoother movement, HIWIN offers a preload with normal clearance because of its ability to absorb higher deviations in mounting surface inaccuracies.

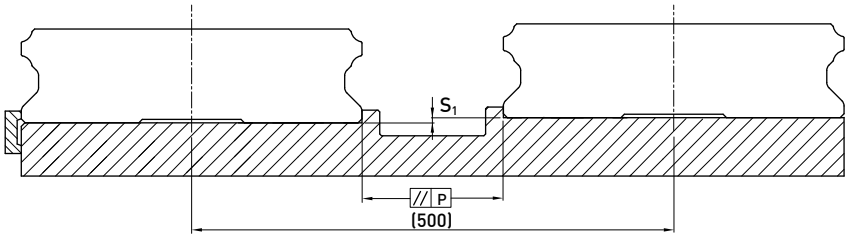

Table 2-7-12 **Max. Parallelism Tolerance (P)**

unit: μm

Size	Preload classes			Size	Preload classes		
	Z0	ZA	ZB		Z0	ZA	ZB
QW17	20	15	-	QW27	25	20	-
QW21	25	18	-	QW35	30	22	20

Table 2-7-13 **Max. Tolerance of Reference Surface Height (S_1)**

unit: μm

Size	Preload classes			Size	Preload classes		
	Z0	ZA	ZB		Z0	ZA	ZB
QW17	65	20	-	QW27	130	85	-
QW21	130	85	-	QW35	130	85	70

2-7-11 Cautions for Installation

(1) Shoulder heights and chamfers

Improper shoulder heights and fillets of mounting surfaces will cause a deviation in accuracy and the interference with the rail or block. As long as the recommended shoulder heights and fillets are followed, installation inaccuracies should be eliminated.

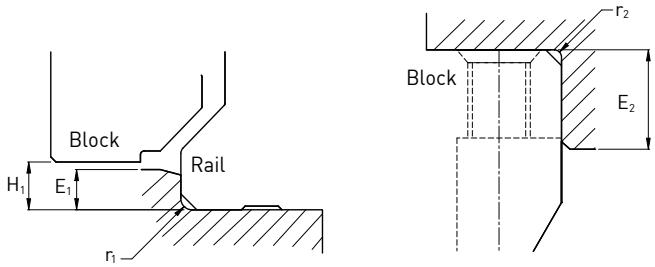

Table 2-7-14 **Shoulder Heights and Chamfers**

unit: mm

Size	Max. radius of fillets r_1 (mm)	Max. radius of fillets r_2 (mm)	Shoulder height beside the rail E_1 (mm)	Shoulder height beside the block E_2 (mm)	Clearance under block H_1 (mm)
QW17	0.4	0.4	2.0	4.0	2.5
QW21	0.4	0.4	2.5	5.0	3.0
QW27	0.5	0.4	2.5	7.0	4.0
QW35	0.5	0.5	2.5	10.0	4.0

(2) Tightening Torque of Bolts for Installation

Improperly tightened mounting bolts will seriously affect the accuracy of linear guide installations. The following tightening torques for different sizes of bolts are recommended.

Table 2-7-15 **Tightening Torque**

Size	Bolt size	Torque N-cm(kgf-cm)		
		Iron	Casting	Aluminum
QW17	M4×0.7P×12L	392 (40)	274 (28)	206 (21)
QW21	M4×0.7P×12L	392 (40)	274 (28)	206 (21)
QW27	M4×0.7P×16L	392 (40)	274 (28)	206 (21)
QW35	M6×1P×20L	1373 (140)	921 (94)	686 (70)

Note: 1 kgf = 9.81 N

2-7-12 Standard and Maximum Lengths of Rail

HIWIN offers a number of standard rail lengths. Standard rail lengths feature end mounting hole placements set to predetermined values (E). For non-standard rail lengths, be sure to specify the E-value to be no greater than 1/2 the pitch (P) dimension. An E-value greater than this will result in unstable rail ends.

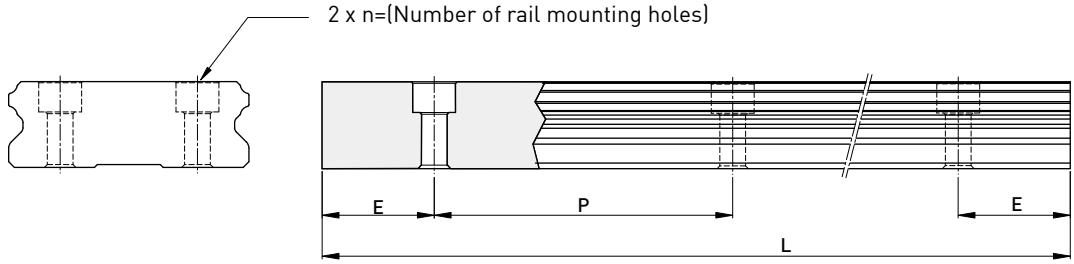

$$L = (n-1) \times P + 2 \times E \qquad \text{Eq.2.3}$$

L : Total length of rail (mm)
n : Number of mounting holes
P : Distance between any two holes (mm)
E : Distance from the center of the last hole to the edge (mm)

Table 2-7-16 **Rail Standard Length and Max. Length** unit: mm

Item	QWR17	QWR21	QWR27	QWR35
Standard Length L(n)	110 (3)	130 (3)	220 (4)	280 (4)
	190 (5)	230 (5)	280 (5)	440 (6)
	310 (8)	380 (8)	340 (6)	600 (8)
	390 (10)	480 (10)	460 (8)	760 (10)
	470 (12)	580 (12)	640 (11)	1000 (13)
	550 (14)	780 (16)	820 (14)	1,640 (21)
	-	-	1,000 (17)	2,040 (26)
	-	-	1,240 (21)	2,520 (32)
	-	-	1,600 (27)	3,000 (38)
Pitch (P)	40	50	60	80
Distance to End (E_s)	15	15	20	20
Max. Standard Length	3,990 (100)	3,980 (80)	4,000 (67)	3,960 (50)
Max. Length	4,000	4,000	4,000	4,000

Note : 1. Tolerance of E value for standard rail is 0.5~-0.5 mm. Tolerance of E value for jointed rail is 0~-0.3 mm.
2. Maximum standard length means the max. rail length with standard E value on both sides.
3. If different E value is needed, please contact HIWIN.

QW Series

Wide Rail

2-7-13 Dimensions for HIWIN QW Series

(1) QWH-CA

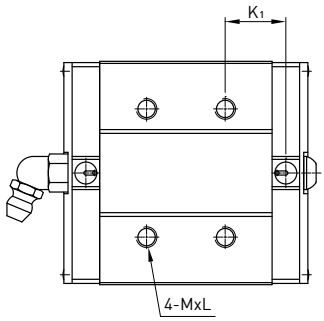

QWH-17,21CA

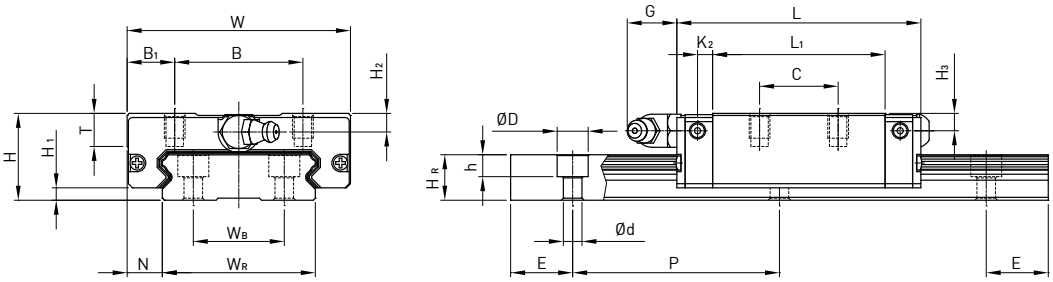

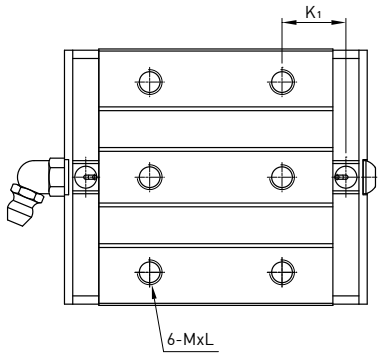

QWH-27,35CA

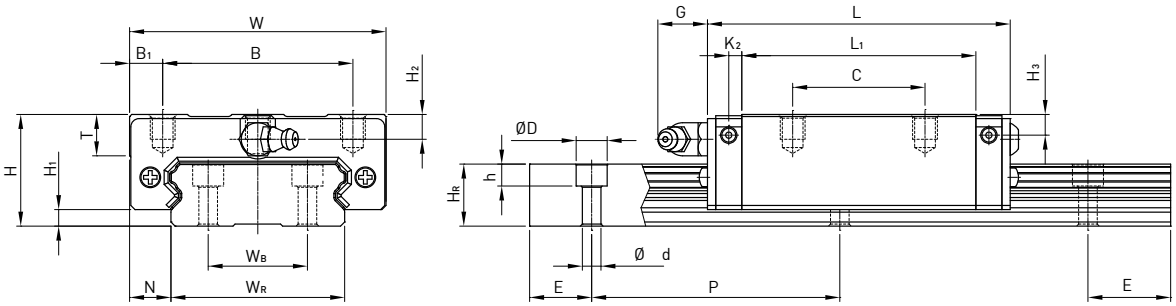

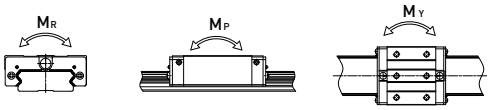

Model No.	Dimensions of Assembly (mm)			Dimensions of Block (mm)													Dimensions of Rail (mm)								Mounting Bolt for Rail	Basic Dynamic Load Rating	Basic Static Load Rating	Static Rated Moment			Weight	
	H	H_1	N	W	B	B_1	C	L_1	L	K_1	K_2	G	Mxl	T	H_2	H_3	W_R	W_B	H_R	D	h	d	P	E	(mm)	C(kN)	C_0 (kN)	M_R kN-m	M_P kN-m	M_Y kN-m	Block kg	Rail kg/m
QWH17CA	17	2.5	8.5	50	29	10.5	15	38	51	-	2.45	4.9	M4x5	6	3	2.5	33	18	9.3	7.5	5.3	4.5	40	15	M4x12	7.32	9.1	0.14	0.055	0.055	0.12	2.2
QWH21CA	21	3	8.5	54	31	11.5	19	41.7	59	14.68	3.65	12	M5x6	8	4.5	4.2	37	22	11	7.5	5.3	4.5	50	15	M4x12	8.1	12.1	0.21	0.08	0.08	0.2	3
QWH27CA	27	4	10	62	46	8	32	56.6	73.2	15.45	3.15	12	M6x6	10	6	5	42	24	15	7.5	5.3	4.5	60	20	M4x16	16	22.2	0.42	0.2	0.2	0.35	4.7
QWH35CA	35	4	15.5	100	76	12	50	83	107	21.5	5	12	M8x8	13	8	6.5	69	40	19	11	9	7	80	20	M6x20	36.8	49.2	1.51	0.65	0.65	1.1	9.7

Note : 1 kgf = 9.81 N

(2) QWW-CC

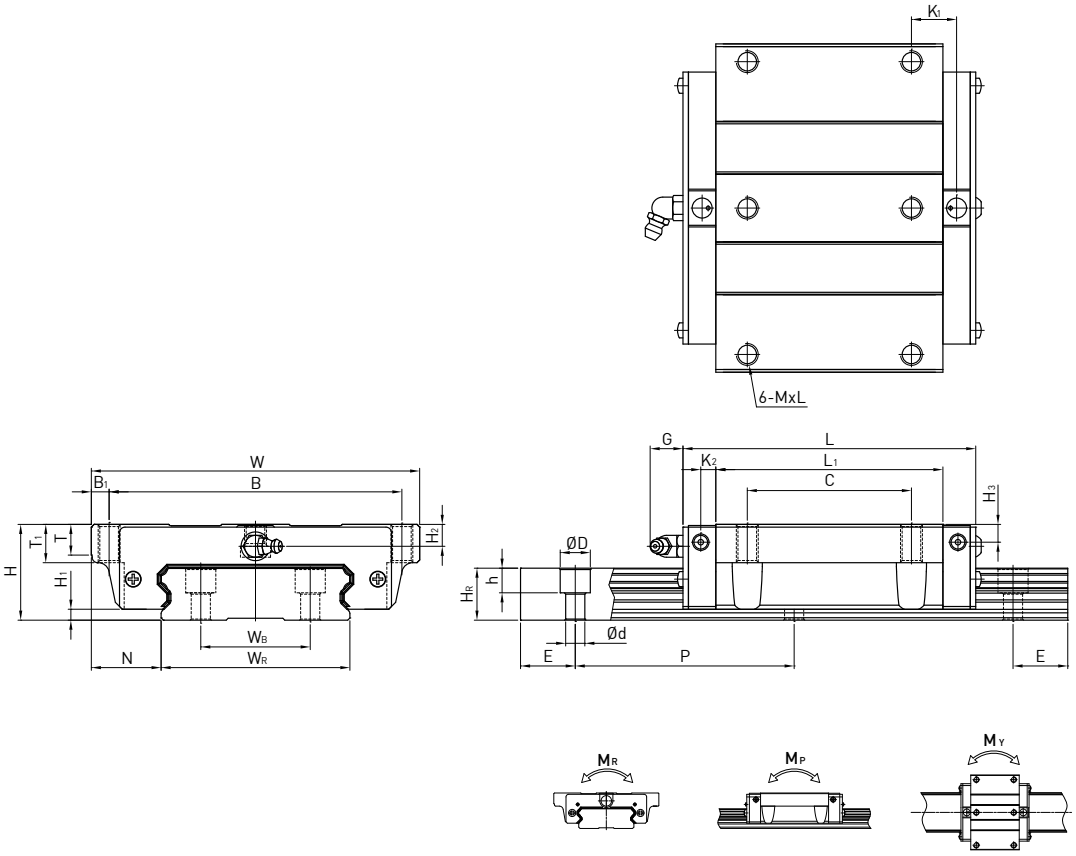

Model No.	Dimensions of Assembly (mm)			Dimensions of Block (mm)														Dimensions of Rail (mm)								Mounting Bolt for Rail	Basic Dynamic Load Rating	Basic Static Load Rating	Static Rated Moment			Weight	
	H	H_1	N	W	B	B_1	C	L_1	L	K_1	K_2	G	M	T	T_1	H_2	H_3	W_R	W_B	H_R	D	h	d	P	E	(mm)	C(kN)	C_0 (kN)	M_R kN-m	M_P kN-m	M_Y kN-m	Block kg	Rail kg/m
QWW17CC	17	2.5	13.5	60	53	3.5	26	38	51	-	2.45	4.9	M4	6	5.1	3	2.5	33	18	9.3	7.5	5.3	4.5	40	15	M4x12	7.32	9.1	0.14	0.055	0.055	0.13	2.2
QWW21CC	21	3	15.5	68	60	4	29	41.7	59	9.68	3.65	12	M5	7.3	8	4.5	4.2	37	22	11	7.5	5.3	4.5	50	15	M4x12	8.1	12.1	0.21	0.08	0.08	0.23	3
QWW27CC	27	4	19	80	70	5	40	56.6	73.2	11.45	3.15	12	M6	8	10	6	5	42	24	15	7.5	5.3	4.5	60	20	M4x16	16	22.2	0.42	0.2	0.2	0.43	4.7
QWW35CC	35	4	25.5	120	107	6.5	60	83	107	16.50	5	12	M8	11.2	14	8	6.5	69	40	19	11	9	7	80	20	M6x20	36.8	49.2	1.51	0.65	0.65	1.26	9.7

Note : 1 kgf = 9.81 N

CG Series

Superior Rolling Moment with Cover Strip

2-8 CG Series - Superior Rolling Moment with Cover Strip Linear Guideway

CG series linear guideways are a four-row arc-tooth contact type, featuring high rigidity, high load, and high torsional resistance. It also has four-way load characteristics. This specification can be matched with the latest slide dustproof accessories.

2-8-1 Features of CG Series

(1) High rolling moment resistance

CG rail designed with DB type (also known as o arrangement) has longer range of moment compared to DF type (also known as x arrangement). It is sutiable for applications that have larger rolling moment.

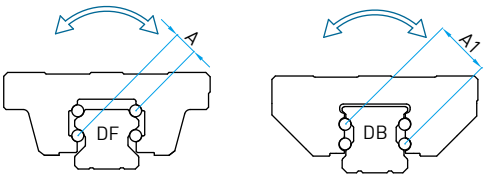

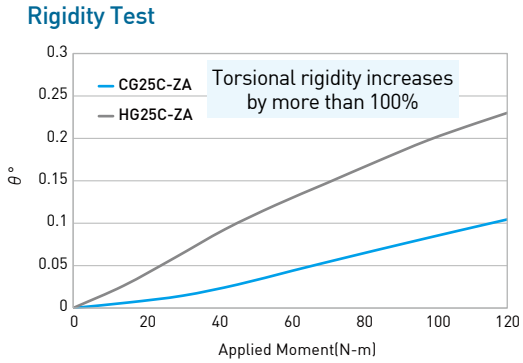

(2) Optimal recirculation path

Better smoothness due to integrated component.

(3) Better protection

The CG series uses a metal scraper as a standard accessory for protection against high temperature chips and particles.

(4) Latest dustproof accessory for rail

The CG series offers a special stainless cover strip for better dust protection than standard bolt caps.

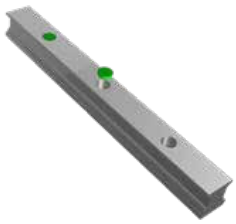

Traditional bolt cap

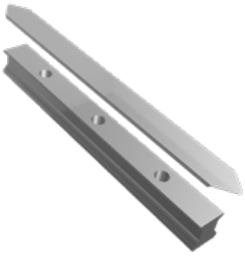

Cover strip

(5) Full lubrication

Specially designed for short stroke motion.

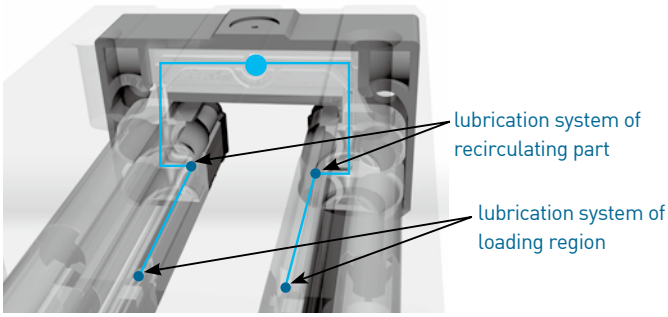

2-8-2 Construction of CG Series

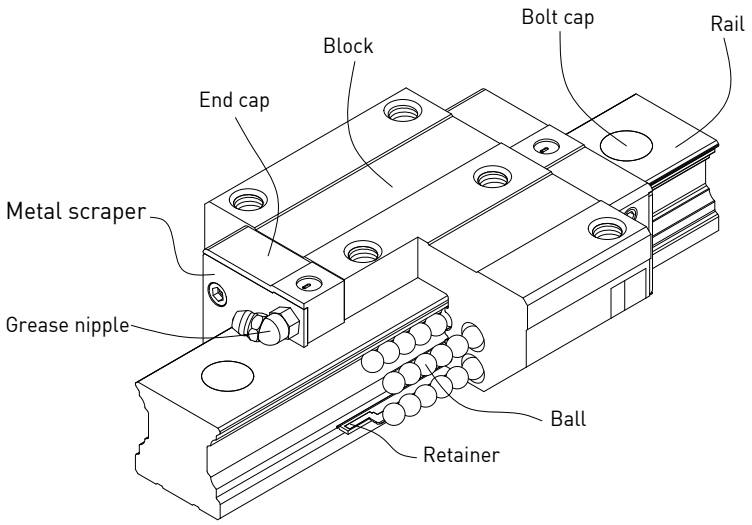

- Rolling circulation system: Block, Rail, End Cap and Retainer
- Lubrication system: Grease Nipple and Piping Joint
- Dust protection system: End seal, Bottom Seal, Bolt Cap, Metal scraper

2-8-3 Model Number of CG Series

CG series guideways can be classified into non-interchangeable and interchangeable types. The sizes are identical. The only difference between the two types is that the interchangeable type of blocks and rails can be freely exchanged, and their accuracy can reach up to P class. The model number of CG series contains the size, type, accuracy class, preload class, etc..

CG Series

Superior Rolling Moment with Cover Strip

(1) Non-interchangeable type

CG H 25 C A E 2 R 1600 E ZA P II + DD+CS

- CG Series
- Block Type
  W : Flange Type
  H : Square Type
  L : Square Type(low)[4]
- Model size
  15, 20, 25, 30, 35, 45
- Load Type
  C : Heavy Load
  H : Super Heavy Load
- Block Mounting
  A : Mounting From Top
  C : Top or Bottom[3]
- E: Special Block
  None: Standard Block
- No. of Blocks per Rail
- Rail Mounting Type
  R : Mounting From Top
  T : Bottom
- Rail Length (mm)
- E: Special Rail
  None: Standard Rail
- Preload Code: Z0, ZA, ZB
- Precision Code: C, H, P, SP, UP
- No.of rails per axis set [1]
- Dust Protection[2]
- CS:Cover Strip
  RC:Reinforced Cap

Note: 1. The roman numerals express a matched set of rails.
2. No symbol indicates standard protection (end seal and bottom seal).
DD: Double seals, bottom seal and metal scraper
3. For mounting type A ,The amount of block mounting holes is four.
For mounting type C ,The amount of block mounting holes is six.
Both types can be mounting from top or bottom.
4. Block type CGL is the low profile design of CGH (square type), the assembled height is same as CGW (flange type) in same size.

(2) Interchangeable type

- **Model Number of CG Block**

CG H 25 C A E ZA P + DD

- CG Series
- Block Type
  W : Flange Type
  H : Square Type
  L : Square Type(low)[4]
- Model size
  15, 20, 25, 30, 35, 45
- Load Type
  C : Heavy Load
  H : Super Heavy Load
- Block Mounting Type
  A : Mounting From Top
  C : Top or Bottom
- E: Special Block
  None: Standard Block
- Preload Code : Z0, ZA
- Precision Code : C, H, P
- Dust Protection[2]

- **Model Number of CG Rail**

CG R 25 R 1200 E P + CS

- CG Series
- Interchangeable Rail
- Model size
  15, 20, 25, 30, 35, 45
- Rail Mounting Type
  R : Mounting From Top
  T : Bottom
- Rail Length (mm)
- E: Special Rail,
  None: Standard Rail
- Precision Code : C, H, P
- CS:Cover Strip
  RC:Reinforced Cap

2-8-4 Types

(1) Block types

There are two types of blocks: flange and square.

Table 2-8-1 **Block Types**

Type	Model	Shape	Height (mm)	Rail Length (mm)	Main Application
Square	CGH-CA CGH-HA	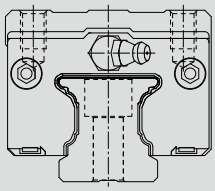	28 ↓ 70	100 ↓ 4000	○ Machine Centers ○ NC Lathes ○ Grinding Machines ○ Precision Machining Machines ○ Heavy Cutting Machines ○ Automation Devices ○ Transportation Equipment ○ Measuring Equipment ○ Devices Requiring High Positional Accuracy
Square	CGL-CA CGL-HA	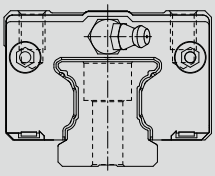	24 ↓ 60	100 ↓ 4000	
Flange	CGW-CC CGW-HC	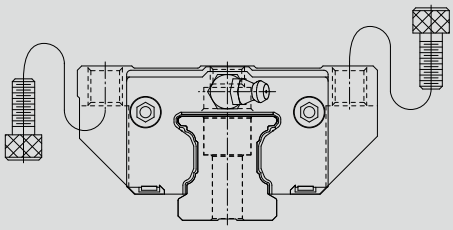	24 ↓ 60	100 ↓ 4000	
Flange	CGW-CA CGW-HA	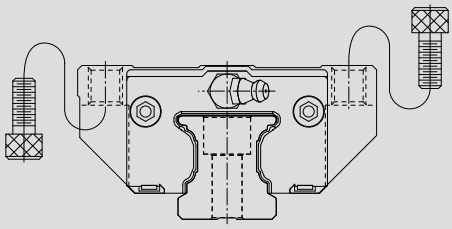	24 ↓ 60	100 ↓ 4000	

(2) Rail types

Besides the standard top mounting type, the bottom mounting type is also available.

Table 2-8-2 **Rail Types**

Mounting from Top	Mounting from bottom
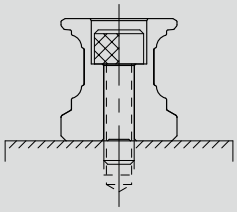	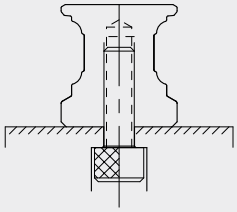

CG Series

Superior Rolling Moment with Cover Strip

2-8-5 Accuracy Classes

The accuracy of CG series can be classified into five classes: normal (C), high (H), precision (P), super precision (SP), ultra precision (UP). Please choose the class by referring the accuracy of applied equipment.

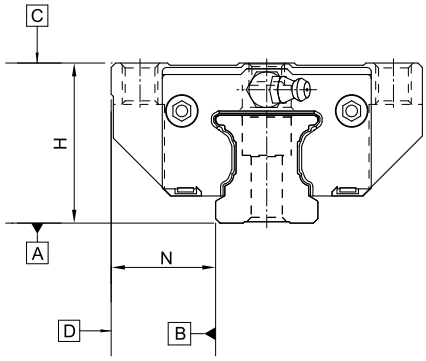

(1) Accuracy of non-interchangeable guideways

Table 2-8-3 **Accuracy Standards** Unit: mm

Item	CG - 15, 20				
Accuracy Classes	Normal (C)	High (H)	Precision (P)	Super Precision (SP)	Ultra Precision (UP)
Dimensional tolerance of height H	± 0.1	± 0.03	0 - 0.03	0 - 0.015	0 - 0.008
Dimensional tolerance of width N	± 0.1	± 0.03	0 - 0.03	0 - 0.015	0 - 0.008
Variation of height H	0.02	0.01	0.006	0.004	0.003
Variation of width N	0.02	0.01	0.006	0.004	0.003
Running parallelism of block surface C to surface A	See Table 2-8-9				
Running parallelism of block surface D to surface B	See Table 2-8-9				

Table 2-8-4 **Accuracy Standards** Unit: mm

Item	CG - 25, 30, 35				
Accuracy Classes	Normal (C)	High (H)	Precision (P)	Super Precision (SP)	Ultra Precision (UP)
Dimensional tolerance of height H	± 0.1	± 0.04	0 - 0.04	0 - 0.02	0 - 0.01
Dimensional tolerance of width N	± 0.1	± 0.04	0 - 0.04	0 - 0.02	0 - 0.01
Variation of height H	0.02	0.015	0.007	0.005	0.003
Variation of width N	0.03	0.015	0.007	0.005	0.003
Running parallelism of block surface C to surface A	See Table 2-8-9				
Running parallelism of block surface D to surface B	See Table 2-8-9				

Table 2-8-5 **Accuracy Standards** Unit: mm

Item	CG - 45				
Accuracy Classes	Normal (C)	High (H)	Precision (P)	Super Precision (SP)	Ultra Precision (UP)
Dimensional tolerance of height H	± 0.1	± 0.05	0 - 0.05	0 - 0.03	0 - 0.02
Dimensional tolerance of width N	± 0.1	± 0.05	0 - 0.05	0 - 0.03	0 - 0.02
Variation of height H	0.03	0.015	0.007	0.005	0.003
Variation of width N	0.03	0.02	0.01	0.007	0.005
Running parallelism of block surface C to surface A	See Table 2-8-9				
Running parallelism of block surface D to surface B	See Table 2-8-9				

(2) Accuracy of interchangeable guideways

Table 2-8-6 **Accuracy Standards**

Unit: mm

Item	CG - 15, 20		
Accuracy Classes	Normal (C)	High (H)	Precision (P)
Dimensional tolerance of height H	± 0.1	± 0.03	± 0.015
Dimensional tolerance of width N	± 0.1	± 0.03	± 0.015
Variation of height H	0.02	0.01	0.006
Variation of width N	0.02	0.01	0.006
Running parallelism of block surface C to surface A	See Table 2-8-9		
Running parallelism of block surface D to surface B	See Table 2-8-9		

Table 2-8-7 **Accuracy Standards**

Unit: mm

Item	CG - 25, 30, 35		
Accuracy Classes	Normal (C)	High (H)	Precision (P)
Dimensional tolerance of height H	± 0.1	± 0.04	± 0.02
Dimensional tolerance of width N	± 0.1	± 0.04	± 0.02
Variation of height H	0.02	0.015	0.007
Variation of width N	0.03	0.015	0.007
Running parallelism of block surface C to surface A	See Table 2-8-9		
Running parallelism of block surface D to surface B	See Table 2-8-9		

Table 2-8-8 **Accuracy Standards**

Unit: mm

Item	CG - 45		
Accuracy Classes	Normal (C)	High (H)	Precision (P)
Dimensional tolerance of height H	± 0.1	± 0.05	± 0.025
Dimensional tolerance of width N	± 0.1	± 0.05	± 0.025
Variation of height H	0.03	0.015	0.007
Variation of width N	0.03	0.02	0.01
Running parallelism of block surface C to surface A	See Table 2-8-9		
Running parallelism of block surface D to surface B	See Table 2-8-9		

CG Series

Superior Rolling Moment with Cover Strip

(3) Accuracy of running parallelism

Table 2-8-9 **Accuracy of Running Parallelism**

Rail Length (mm)	Accuracy (μm)				
	C	H	P	SP	UP
~ 100	12	7	3	2	2
100 ~ 200	14	9	4	2	2
200 ~ 300	15	10	5	3	2
300 ~ 500	17	12	6	3	2
500 ~ 700	20	13	7	4	2
700 ~ 900	22	15	8	5	3
900 ~ 1,100	24	16	9	6	3
1,100 ~ 1,500	26	18	11	7	4
1,500 ~ 1,900	28	20	13	8	4
1,900 ~ 2,500	31	22	15	10	5
2,500 ~ 3,100	33	25	18	11	6
3,100 ~ 3,600	36	27	20	14	7
3,600 ~ 4,000	37	28	21	15	7

2-8-6 Preload

(1) Definition

A preload can be applied to each guideway. Oversized balls are used. Generally, a linear motion guideway has a negative clearance between groove and balls in order to improve stiffness and maintain high precision. The figure shows the load is multiplied by the preload, the rigidity is doubled and the deflection is reduced by one half. The preload no larger than ZA would be recommended for the model size under HG20 to avoid an over-preload affecting the guideway's life.

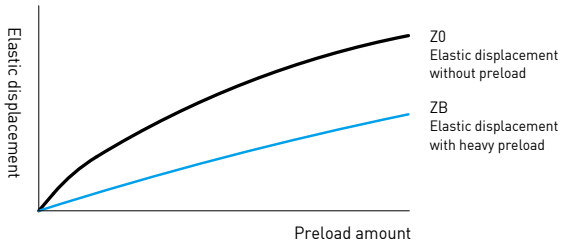

(2) Preload classes

HIWIN offers three classes of standard preload for various applications and conditions.

Table 2-8-10 **Preload Classes**

Class	Code	Preload	Condition	Examples of Application
Light Preload	Z0	0~ 0.02C	Certain load direction,low impact, low precision required	Transportation devices, auto-packing machines, X-Y axis for general industrial machines, welding machines, welders
Medium Preload	ZA	0.05C~0.07C	High precision required	Machining centers, Z axis for general industrial, machines, EDM, NC lathes, Precision X-Y tables, measuring equipment
Heavy Preload	ZB	0.10C~ 0.12C	High rigidity required, with vibration and impact	Machining centers, grinding machines, NC lathes, horizontal and vertical milling machines, Z axis of machine tools, Heavy cutting machines

Class	Interchangeable Guideway	Non-Interchangeable Guideway
Preload classes	Z0, ZA	Z0, ZA, ZB

Note: The "C" in the preload column denotes basic dynamic load rating.

(3) Stiffness performance

Stiffness depends on preload. The following table shows stiffness value of each size.

Table 2-8-11 **Radial stiffness for CG Series**

Load type	Series / Size	Stiffness (N/μm)		
		Z0	ZA	ZB
Heavy load	CG 15C	180	341	482
	CG 20C	258	540	701
	CG 25C	290	581	786
	CG 30C	342	595	907
	CG 35C	378	606	950
	CG 45C	443	634	999
Super heavy load	CG 20H	331	716	918
	CG 25H	351	720	969
	CG 30H	449	802	1208
	CG 35H	497	813	1269
	CG 45H	587	842	1291

2-8-7 Lubrication

(1) Grease

Grease nipple

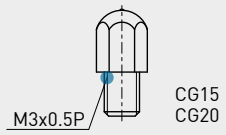

N0.34310010

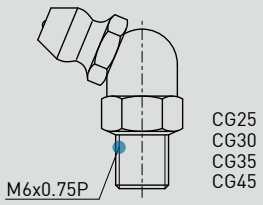

N0.34320001

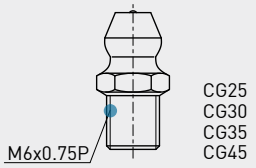

N0.34310003(OPTION)

Mounting location

The standard location of the grease fitting is at both ends of the block, but the nipple can be mounted at each side of block. For lateral installation, we recommend that the nipple can be mounted at the non-reference side, otherwise please contact us. It is possible to perform lubrication by using the oil-piping joint.

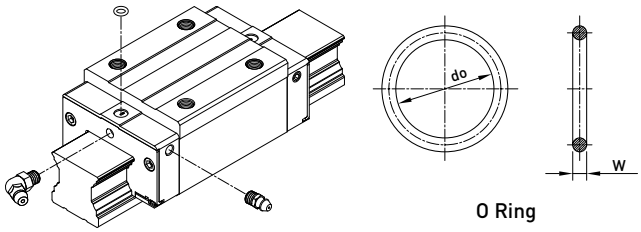

O Ring

Table 2-8-12 **O-Ring size and max. permissible depth for piercing**

Size	O-Ring		Lube hole at top: max. permissible depth for piercing
	do (mm)	W (mm)	T_{max} (mm)
CG15	2.5±0.15	1.5±0.15	3.75
CG20	4.5±0.15	1.5±0.15	5.7
CG25	4.5±0.15	1.5±0.15	5.8
CG30	4.5±0.15	1.5±0.15	6.3
CG35	4.5±0.15	1.5±0.15	8.8
CG45	4.5±0.15	1.5±0.15	8.2

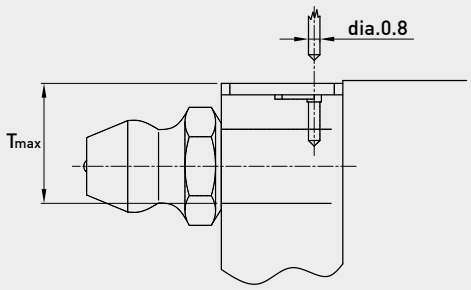

CG Series

Superior Rolling Moment with Cover Strip

The lubricant amount for a block filled with grease

Table 2-8-13 **The lubricant Amount for a Block Filled with Grease**

Size	Heavy load (cm^3)	Super Heavy load (cm^3)	Size	Heavy load (cm^3)	Super Heavy load (cm^3)
CG15	1	-	CG30	3.5	5
CG20	2	3	CG35	7	9
CG25	2.5	4	CG45	8.5	-

Note : If other size is needed, please contact HIWIN.

Frequency of replenishment

Table 2-8-14 **Frequency of replenishment for one block**

Recommended lubrication interval [km]					
Size	P/C < 0,1	0,1 < P/C < 0,3	Size	P/C < 0,1	0,1 < P/C < 0,3
CG15	3000	(C/P)*100	CG30	3000	(C/P)*100
CG20	3000	(C/P)*100	CG35	3000	(C/P)*100
CG25	3000	(C/P)*100	CG45	3000	(C/P)*100

C : Dynamic rating P : Loading

(2) Oil

The recommended viscosity of oil is about 30~150cSt. If customers need to use oil-type lubrication, please inform us.

Types of oil piping joint

LF-63

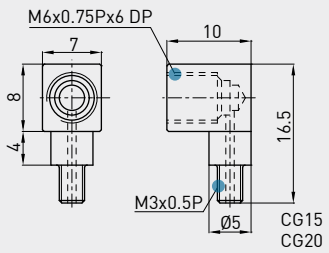

NO.97002PA1

LF-76

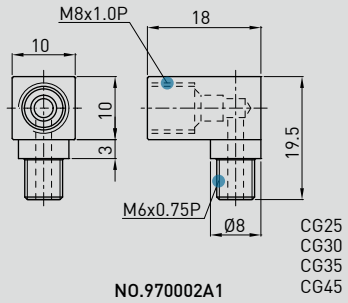

NO.970002A1

LF-86

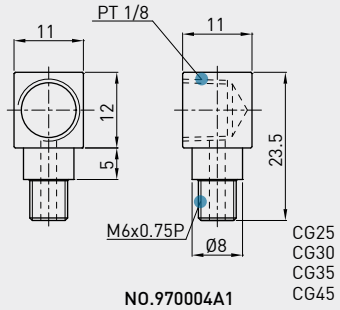

NO.970004A1

SF-63

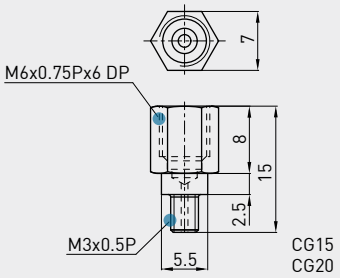

NO.97002QA2

SF-76

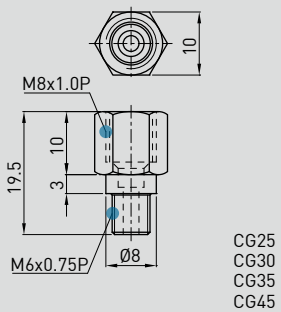

NO.970001A1

SF-86

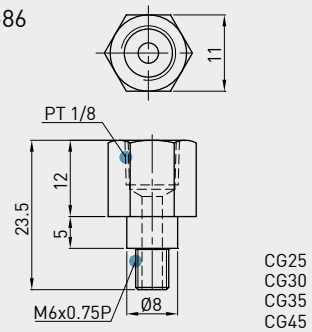

NO.970003A1

Oil refilling rate

Table 2-8-15

Size	Refilling rate (cm^3/hr)	Size	Refilling rate (cm^3/hr)
CG 15	0.2	CG 30	0.3
CG 20	0.2	CG 35	0.3
CG 25	0.3	CG 45	0.4

2-8-8 Dust Proof Accessories

(1) Codes of standard dust proof accessories

If the following accessories are needed, please add the code followed by the model number.

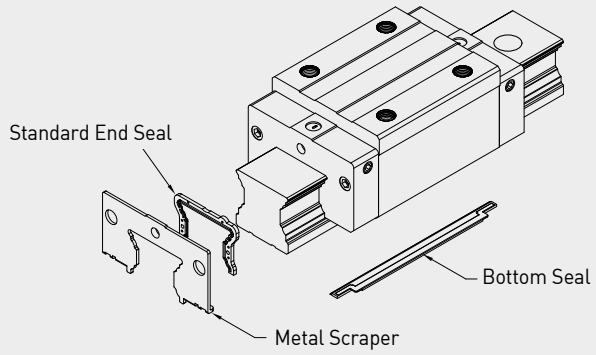

SS (Standard End Seal +Metal Scraper+Bottom Seal)

(2) Codes of high-dust proof accessories

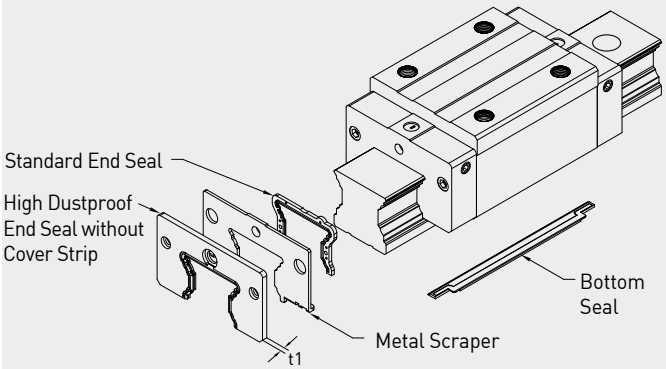

DD (Standard End Seal+High Dustproof End Seal without Cover Strip +Metal Scraper+Bottom Seal)

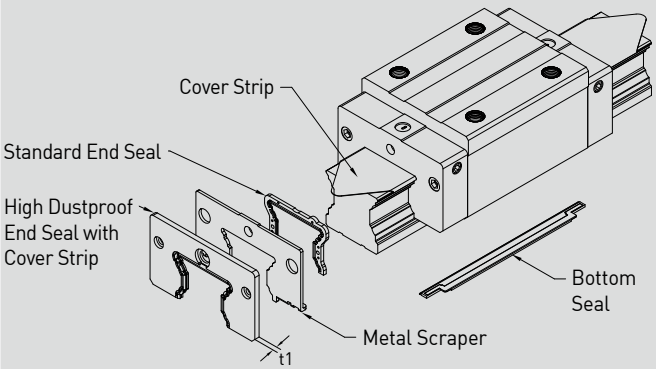

DD+CS(Standard End Seal+High Dustproof End Seal with Cover Strip +Metal Scraper+Bottom Seal+Cover Strip)

(3) Function of dust proof accessories

End seal and bottom seal

To prevent life reduction caused by iron chips or dust entering the block.

Double seals

Enhances the wiping effect, foreign matter can be completely wiped off.

Table 2-8-16 **Dimensions of end seal**

Size	Thickness (t1) (mm)	Size	Thickness (t1) (mm)
CG15	2.8	CG30	2.8
CG20	2.8	CG35	2.8
CG25	2.5	CG45	2.7

CG Series

Superior Rolling Moment with Cover Strip

Cover Strip

The cover strip offers better dust proof protection than rail bolt caps and is easier to install. The strip is held in place by a plastic retainer at each end. For high temperature environments a metal retainer is available.

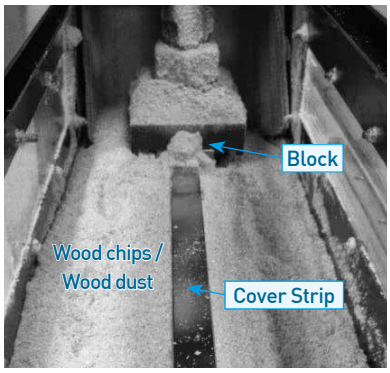

Spec.	CGH25CA1R700Z0C+DD/CS
Max.velocity/ acceleration	1m/s,1G
Loading	Fixture weight
Distance	1500km
Dust type	Wood chips / Wood dust
Diameter	100~500μm

Test result

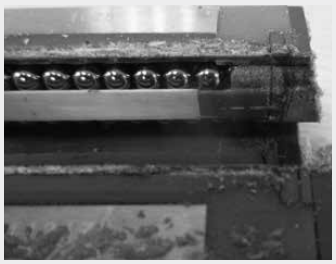

No dust get into ball tracks

Bolt caps for rail mounting holes

Caps are used to cover the mounting holes to prevent chips or other foreign objects from collecting in the holes. The caps will be enclosed in each rail package.

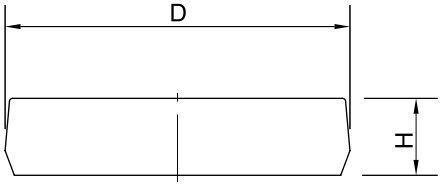

Table 2-8-17 **Dimensions of Bolt Caps for Rail Mounting Holes**

Rail size	Bolt size	Diameter(D) (mm)	Thickness(H) (mm)	Rail size	Bolt size	Diameter(D) (mm)	Thickness(H) (mm)
CGR15	M4	7.65	1.1	CGR30	M8	14.20	3.5
CGR20	M5	9.65	2.5	CGR35	M8	14.20	3.5
CGR25	M6	11.15	2.5	CGR45	M12	20.25	4.5

(4) Dimensions of block equipped with the parts

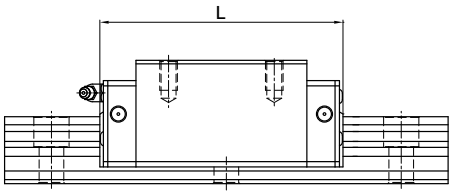

Table 2-8-18 **Overall block length**

unit: mm

Size	Overall block length (L)			Size	Overall block length (L)		
	SS	DD	DD+CS		SS	DD	DD+CS
CG15C	58.2	63.8	63.8	-	-	-	-
CG20C	74.9	80.5	80.5	CG20H	90.9	96.5	96.5
CG25C	84	89	89	CG25H	101.4	106.4	106.4
CG30C	97.4	103.8	103	CG30H	119.9	126.3	125.5
CG35C	111.4	117.8	117	CG35H	135.8	142.2	141.4
CG45C	137.6	145.6	145.6	CG45H	174	182	182

2-8-9 Friction

The maximum value of resistance per end seal are as shown in the table.

Table 2-8-19 **Seal Resistance**

Size	Resistance N (kgf)	Size	Resistance N (kgf)
CG15	0.98 (0.1)	CG30	3.43 (0.35)
CG20	1.96 (0.2)	CG35	3.92 (0.4)
CG25	3.43 (0.35)	CG45	4.9 (0.5)

Note : 1 kgf = 9.81N
Other specifications please contact HIWIN

2-8-10 The Accuracy Tolerance of Mounting Surface

CG rail designed with DB type (also known as o arrangement) which has better moment load capacity. Moreover, The CG series can compensate for some suface-error on installation and still maintain smooth linear motion due to circular-arc contact design.

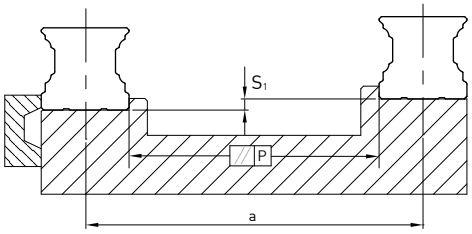

Table 2-8-20 **Max. Parallelism Tolerance (P)** unit: μm

Size	Preload classes		
	Z0	ZA	ZB
CG15	9	5	4
CG20	11	7	5
CG25	12	8	6
CG30	14	9	7
CG35	15	11	8
CG45	19	14	10

- **The accuracy tolerance of reference surface height (S_1)**

$$S_1 = K \cdot 10^{(-4)} \cdot a - T_H$$

S_1 : Max. tolerance of height
a : Distance between paired rails
K : Coefficient of tolerance of height
T_H : dimensional tolerance of height,please refer to accuracy class

Table 2-8-21 **Coefficient of tolerance of height**

Size	Preload classes		
	Light Preload (Z0)	Medium Preload (ZA)	Heavy Preload (ZB)
K [μm/mm]	2.8	1.7	1.2

CG Series

Superior Rolling Moment with Cover Strip

2-8-11 Cautions for Installation

(1) Shoulder heights and fillets

Improper shoulder heights and fillets of mounting surfaces will cause a deviation in accuracy and the interference with the rail or block. As long as the recommended shoulder heights and fillets are followed, installation inaccuracies should be eliminated.

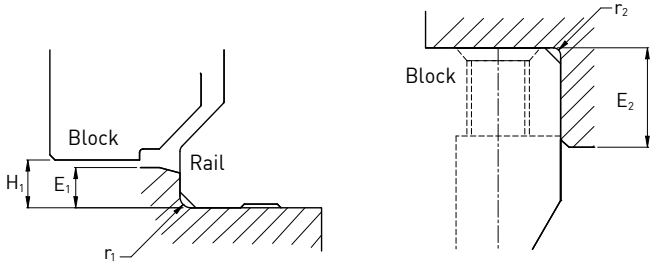

Table 2-8-22 **Shoulder Heights and Fillets**

Size	Max. radius of fillets r_1 (mm)	Max. radius of fillets r_2 (mm)	Shoulder height beside the rail E_1 (mm)	Shoulder height beside the block E_2 (mm)	Clearance under block H_1 (mm)
CG 15	0.5	0.5	3.0	4.0	4.3
CG 20	0.5	0.5	3.5	5.0	4.6
CG 25	1.0	1.0	5.0	5.0	5.5
CG 30	1.0	1.0	5.0	5.0	6.0
CG 35	1.0	1.0	6.0	6.0	7.5
CG 45	1.0	1.0	8.0	8.0	9.5

(2) Tightening Torque of Bolts for Installation

Improper tightening of bolts will seriously influence the accuracy of Linear Guideway installation. The following tightening torques for different sizes of bolts are recommended.

Table 2-8-23 **Mounting Torque**

Size	Bolt size	Torque N-cm (kgf-cm)		
		Iron	Casting	Aluminum
CG 15	M4×0.7P×16L	392(40)	274(28)	206(21)
CG 20	M5×0.8P×16L	883(90)	588(60)	441(45)
CG 25	M6×1P×20L	1373(140)	921(94)	686(70)
CG 30	M8×1.25P×25L	3041(310)	2010(205)	1470(150)
CG 35	M8×1.25P×25L	3041(310)	2010(205)	1470(150)
CG 45	M12×1.75P×35L	11772(1200)	7840(800)	5880(600)

Note : 1 kgf = 9.81N

2-8-12 Standard and Maximum Lengths of Rail

HIWIN offers standard rail lengths for customer needs. For non-standard E-values, the recommended dimension should not be greater than 1/2 of the pitch (P) dimension. This will prevent an unstable rail end.

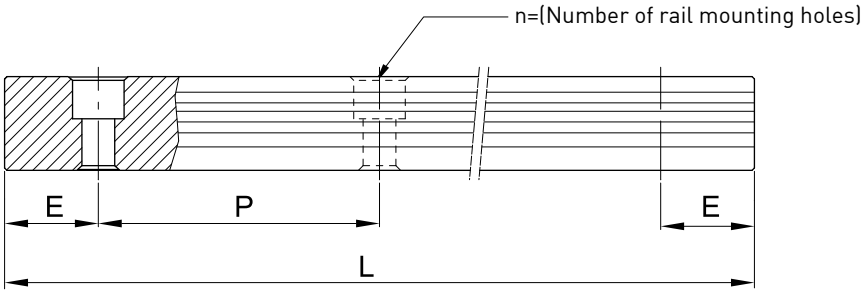

$$L = (n-1) \times P + 2 \times E \quad \text{Eq.2.1}$$

L : Total length of rail (mm)
n : Number of mounting holes
P : Distance between any two holes (mm)
E : Distance from the center of the last hole to the edge (mm)

Table 2-8-24 **Rail Standard Length and Max. Length**

unit: mm

Item	CG15	CG20	CG25	CG30	CG35	CG45
Standard Length L(n)	160(3)	220(4)	220(4)	280(4)	280(4)	570(6)
	220(4)	280(5)	280(5)	440(6)	440(6)	885(9)
	280(5)	340(6)	340(6)	600(8)	600(8)	1,200(12)
	340(6)	460(8)	460(8)	760(10)	760(10)	1,620(16)
	460(8)	640(11)	640(11)	1,000(13)	1,000(13)	2,040(20)
	640(11)	820(14)	820(14)	1,640(21)	1,640(21)	2,460(24)
	820(14)	1,000(17)	1,000(17)	2,040(26)	2,040(26)	2,985(29)
		1,240(21)	1,240(21)	2,520(32)	2,520(32)	
			1,600(27)	3,000(38)	3,000(38)	
Pitch (P)	60	60	60	80	80	105
Distance to End (E_s)	20	20	20	20	20	22.5
Max. Standard Length	4,000(67)	4,000(67)	4,000(67)	3,960(50)	3,960(50)	3,930(38)
Max. Length	4,000	4,000	4,000	4,000	4,000	4,000

Note : 1. Tolerance of E value for standard rail is 0.5~-0.5 mm. Tolerance of E value for jointed rail is 0~-0.3 mm.
2. Maximum standard length means the max. rail length with standard E value on both sides.
3. If different E value is needed, please contact HIWIN.

CG Series

Superior Rolling Moment with Cover Strip

2-8-13 Dimensions for HIWIN CG Series

(1) CGH-CA / CGH-HA

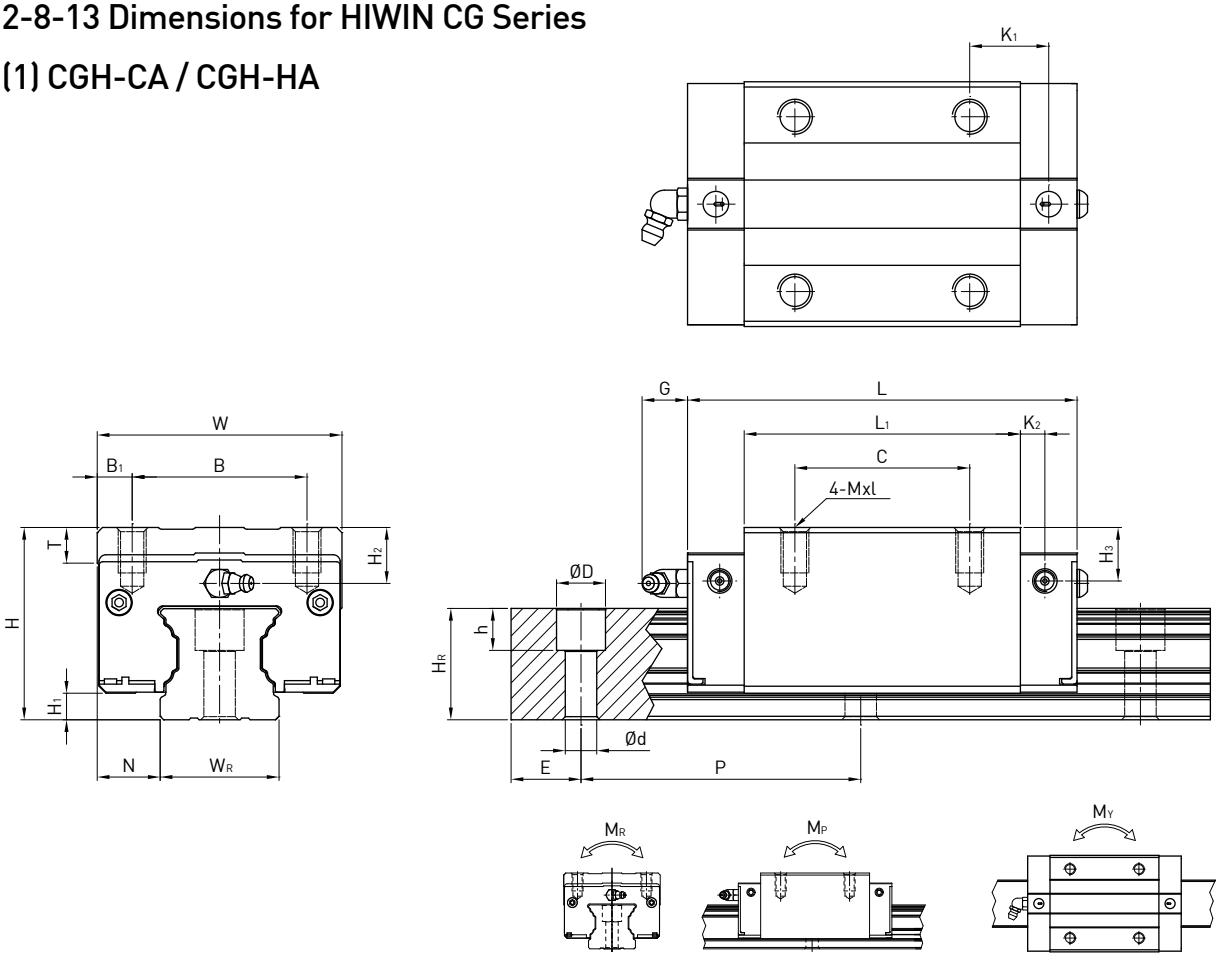

Model No.	Dimensions of Assembly (mm)			Dimensions of Block (mm)													Dimensions of Rail (mm)							Mounting Bolt for Rail	Basic Dynamic Load Rating	Basic Static Load Rating	Static Rated Moment			Weight	
	H	H_1	N	W	B	B_1	C	L_1	L	G	K_1	K_2	T	H_2	H_3	M x l	W_R	H_R	D	h	d	P	E	(mm)	C (kN)	C_0 (kN)	M_R kN-m	M_P kN-m	M_Y kN-m	Block kg	Rail kg/m
CGH15CA	28	4.1	9.5	34	26	4	26	39.6	58.2	6	10.8	4.25	6	7.8	7.8	M4 x 6	15	16.2	7.5	5.9	4.5	60	20	M4x17	14.7	19.52	0.19	0.14	0.14	0.15	1.58
CGH20CA	30	4.65	12	44	32	6	36	52.5	74.9	6	12.45	5.5	8	3.7	4	M5 x 6	20	20.55	9.5	8.5	6	60	20	M5x19	23.7	30.51	0.37	0.28	0.28	0.25	2.48
CGH20HA	30	4.65	12	44	32	6	50	68.5	90.9	6	13.45	5.5	8	3.7	4	M5 x 6	20	20.55	9.5	8.5	6	60	20		28.6	39.9	0.48	0.48	0.48	0.33	2.48
CGH25CA	40	6.1	12.5	48	35	6.5	35	61	84	13	17.4	5	8	10	9.1	M6 x 8	23	24.25	11	9	7	60	20	M6x22	34.96	43.94	0.6	0.49	0.49	0.46	3.38
CGH25HA	40	6.1	12.5	48	35	6.5	50	78.4	101.4	13	18.6	5	8	10	9.1	M6 x 8	23	24.25	11	9	7	60	20		40.5	54.08	0.74	0.73	0.73	0.59	3.38
CGH30CA	45	7	16	60	40	10	40	69	97.4	13	19.75	8.7	9.5	9.7	9.7	M8 x 10	28	28.35	14	12	9	80	20	M8x25	46	55.19	0.95	0.7	0.7	0.71	5.1
CGH30HA	45	7	16	60	40	10	60	91.5	119.9	13	21	8.7	9.5	9.7	9.7	M8 x 10	28	28.35	14	12	9	80	20		58.59	78.18	1.35	1.23	1.23	0.94	5.1
CGH35CA	55	7.6	18	70	50	10	50	79	111.4	13	22.6	7	10.2	16	15.3	M8 x 13	34	31.85	14	12	9	80	20	M8x28	61.17	79.3	1.73	1.09	1.09	1.24	7.14
CGH35HA	55	7.6	18	70	50	10	72	103.4	135.8	13	23.8	7	10.2	16	15.3	M8 x 13	34	31.85	14	12	9	80	20		77.9	112.34	2.46	2.02	2.02	1.62	7.14
CGH45CA	70	9.7	20.5	86	60	13	60	97.2	137.6	13	23	8.7	16	18.5	18.5	M10 x 17	45	39.85	20	17	14	105	22.5	M12x37	98.43	112.66	3.56	2.35	2.35	2.38	11.51
CGH45HA	70	9.7	20.5	86	60	13	80	133.6	174	13	31.2	8.7	16	18.5	18.5	M10 x 17	45	39.85	20	17	14	105	22.5		125.58	159.6	5.05	4.45	4.45	3.01	11.51

Note : 1 kgf = 9.81 N

(2) CGL-CA / CGL-HA

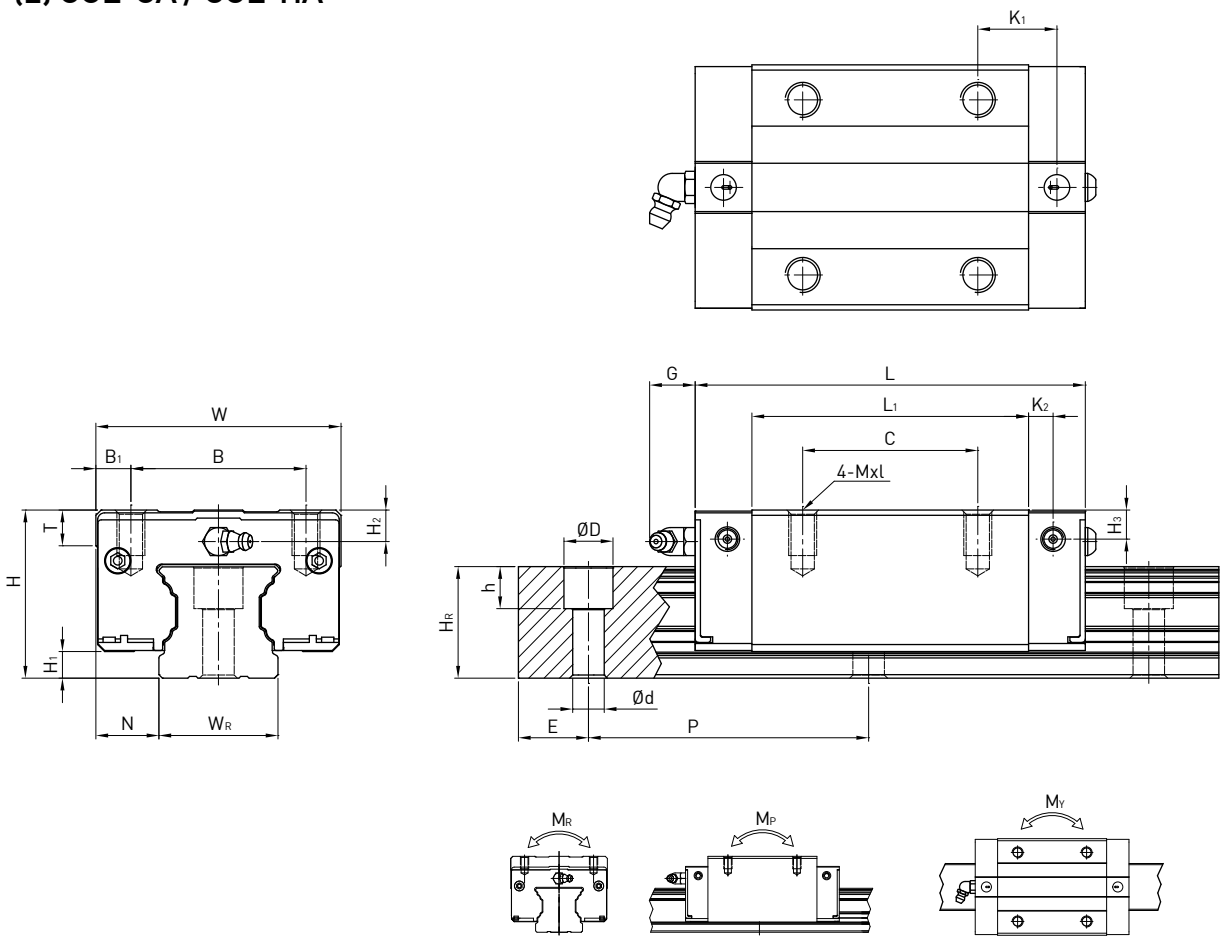

Model No.	Dimensions of Assembly (mm)			Dimensions of Block (mm)													Dimensions of Rail (mm)							Mounting Bolt for Rail	Basic Dynamic Load Rating	Basic Static Load Rating	Static Rated Moment			Weight	
	H	H_1	N	W	B	B_1	C	L_1	L	G	K_1	K_2	T	H_2	H_3	Mxl	W_R	H_R	D	h	d	P	E	(mm)	C (kN)	C_0 (kN)	M_R kN-m	M_P kN-m	M_Y kN-m	Block kg	Rail kg/m
CGL15CA	24	4.1	9.5	34	26	4	26	39.6	58.2	6	10.8	4.25	6	3.8	3.8	M4x6	15	16.2	7.5	5.9	4.5	60	20	M4x17	14.7	19.52	0.19	0.14	0.14	0.11	1.58
CGL25CA	36	6.1	12.5	48	35	6.5	35	61	84	13	17.4	5	8	6	5.1	M6x8	23	24.25	11	9	7	60	20	M6x22	34.96	43.94	0.6	0.49	0.49	0.37	3.38
CGL25HA	36	6.1	12.5	48	35	6.5	50	78.4	101.4	13	18.6	5	8	6	5.1	M6x8	23	24.25	11	9	7	60	20		40.5	54.08	0.74	0.73	0.73	0.47	3.38
CGL30CA	42	7	16	60	40	10	40	69	97.4	13	19.75	8.7	9.5	6.7	6.7	M8x10	28	28.35	14	12	9	80	20	M8x25	46	55.19	0.95	0.7	0.7	0.61	5.1
CGL30HA	42	7	16	60	40	10	60	91.5	119.9	13	21	8.7	9.5	6.7	6.7	M8x10	28	28.35	14	12	9	80	20		58.59	78.18	1.35	1.23	1.23	0.82	5.1
CGL35CA	48	7.6	18	70	50	10	50	79	111.4	13	22.6	7	10.2	9	8.3	M8x13	34	31.85	14	12	9	80	20	M8x28	61.17	79.3	1.73	1.09	1.09	0.93	7.14
CGL35HA	48	7.6	18	70	50	10	72	103.4	135.8	13	23.8	7	10.2	9	8.3	M8x13	34	31.85	14	12	9	80	20		77.9	112.34	2.46	2.02	2.02	1.22	7.14
CGL45CA	60	9.7	20.5	86	60	13	60	97.2	137.6	13	23	8.7	16	8.5	8.5	M10x17	45	39.85	20	17	14	105	22.5	M12x37	98.43	112.66	3.56	2.35	2.35	1.72	11.51
CGL45HA	60	9.7	20.5	86	60	13	80	133.6	174	13	31.2	8.7	16	8.5	8.5	M10x17	45	39.85	20	17	14	105	22.5		125.58	159.6	5.05	4.45	4.45	2.39	11.51

Note : 1 kgf = 9.81 N

CG Series

Superior Rolling Moment with Cover Strip

(3) CGW-CA / CGW-HA

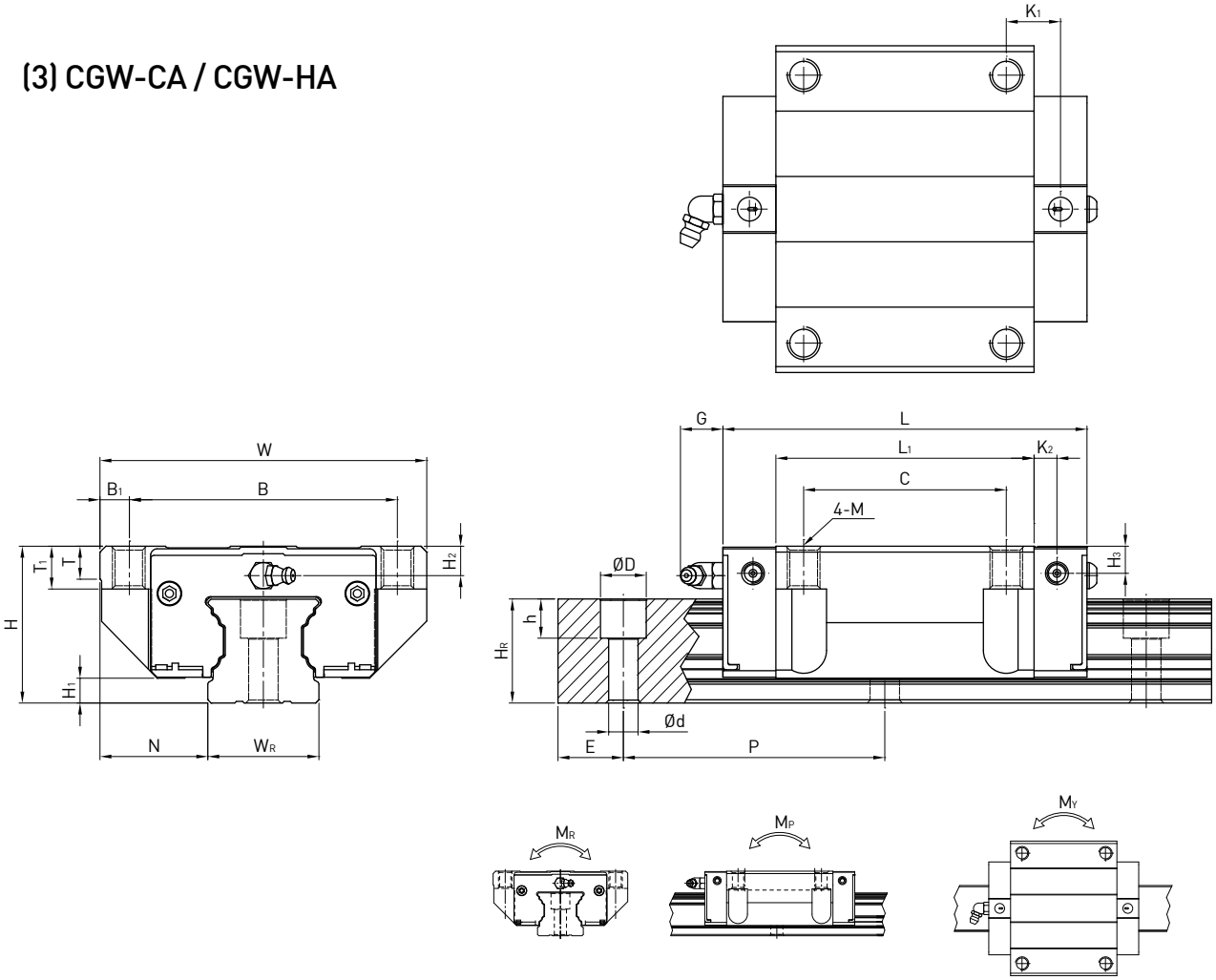

Model No.	Dimensions of Assembly (mm)			Dimensions of Block (mm)														Dimensions of Rail (mm)							Mounting Bolt for Rail	Basic Dynamic Load Rating	Basic Static Load Rating	Static Rated Moment			Weight	
	H	H_1	N	W	B	B_1	C	L_1	L	G	K_1	K_2	T	T_1	H_2	H_3	M	W_R	H_R	D	h	d	P	E	(mm)	C (kN)	C_0 (kN)	M_R kN-m	M_P kN-m	M_Y kN-m	Block kg	Rail kg/m
CGW15CA	24	4.1	16	47	38	4.5	30	39.6	58.2	6	8.8	4.25	6	6.5	3.8	3.8	M5	15	16.2	7.5	5.9	4.5	60	20	M4x17	14.7	19.52	0.19	0.14	0.14	0.14	1.58
CGW20CA	30	4.65	21.5	63	53	5	40	52.5	74.9	6	10.45	5.5	6.5	7.7	3.7	4	M6	20	20.55	9.5	8.5	6	60	20	M5x19	23.7	30.51	0.37	0.28	0.28	0.36	2.48
CGW20HA	30	4.65	21.5	63	53	5	40	68.5	90.9	6	18.45	5.5	6.5	7.7	3.7	4	M6	20	20.55	9.5	8.5	6	60	20		28.6	39.9	0.48	0.48	0.48	0.47	2.48
CGW25CA	36	6.1	23.5	70	57	6.5	45	61	84	13	12.4	5	7	9.3	6	5.1	M8	23	24.25	11	9	7	60	20	M6x22	34.96	43.94	0.6	0.49	0.49	0.53	3.38
CGW25HA	36	6.1	23.5	70	57	6.5	45	78.4	101.4	13	21.1	5	7	9.3	6	5.1	M8	23	24.25	11	9	7	60	20		40.5	54.08	0.74	0.73	0.73	0.68	3.38
CGW30CA	42	7	31	90	72	9	52	69	97.4	13	13.75	8.7	10.5	12	6.7	6.7	M10	28	28.35	14	12	9	80	20	M8x25	46	55.19	0.95	0.7	0.7	0.9	5.1
CGW30HA	42	7	31	90	72	9	52	91.5	119.9	13	25	8.7	10.5	12	6.7	6.7	M10	28	28.35	14	12	9	80	20		58.59	78.18	1.35	1.23	1.23	1.19	5.1
CGW35CA	48	7.6	33	100	82	9	62	79	111.4	13	16.6	7	10.1	13.1	9	8.3	M10	34	31.85	14	12	9	80	20	M8x28	61.17	79.3	1.73	1.09	1.09	1.37	7.14
CGW35HA	48	7.6	33	100	82	9	62	103.4	135.8	13	28.8	7	10.1	13.1	9	8.3	M10	34	31.85	14	12	9	80	20		77.9	112.34	2.46	2.02	2.02	1.79	7.14
CGW45CA	60	9.7	37.5	120	100	10	80	97.2	137.6	13	13	8.7	13.5	15	8.5	8.5	M12	45	39.85	20	17	14	105	22.5	M12x37	98.43	112.66	3.56	2.35	2.35	2.45	11.51
CGW45HA	60	9.7	37.5	120	100	10	80	133.6	174	13	31.2	8.7	13.5	15	8.5	8.5	M12	45	39.85	20	17	14	105	22.5		125.58	159.6	5.05	4.45	4.45	3	11.51

Note : 1 kgf = 9.81 N

(4) CGW-CC / CGW-HC

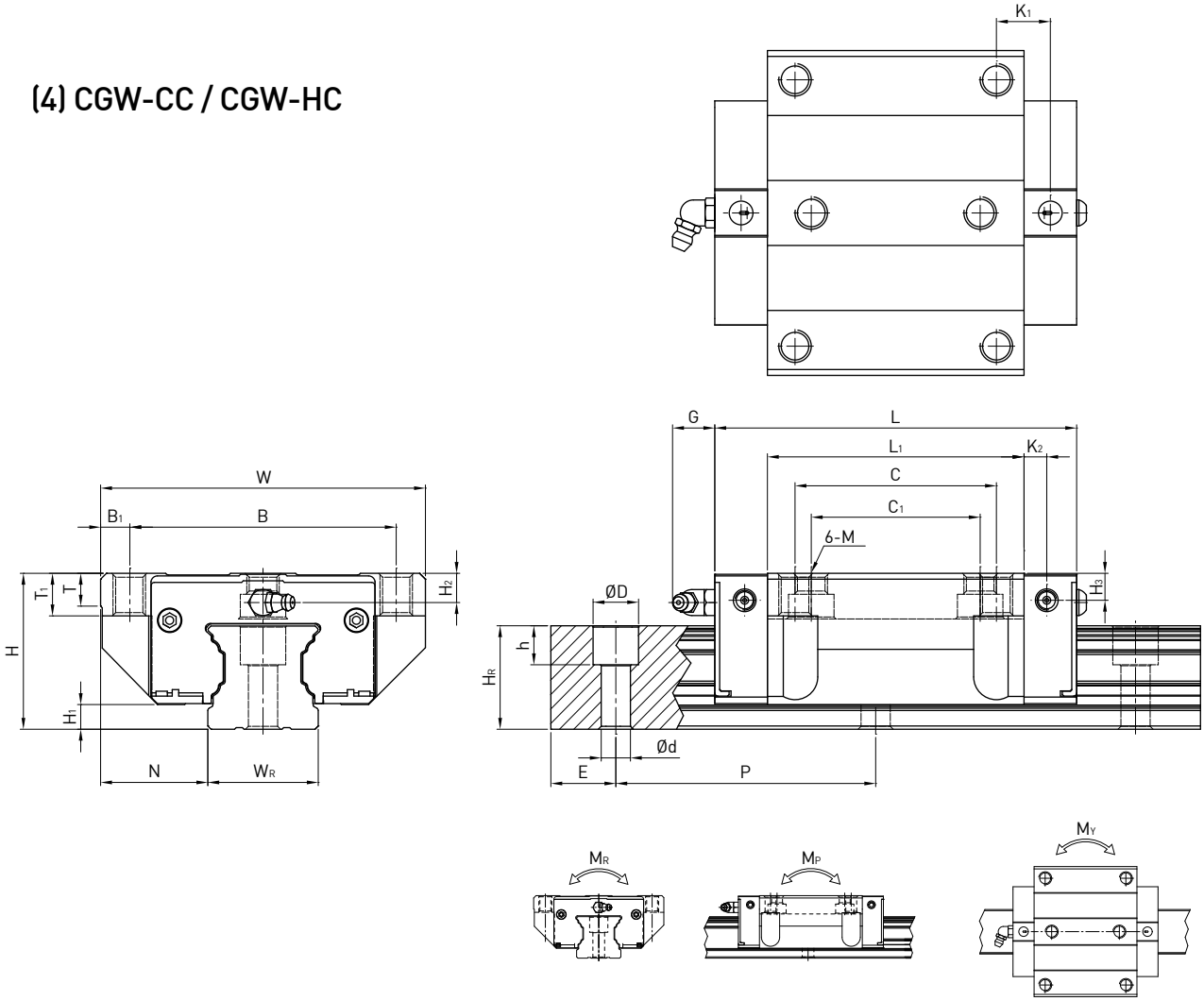

Model No.	Dimensions of Assembly (mm)			Dimensions of Block (mm)															Dimensions of Rail (mm)							Mounting Bolt for Rail	Basic Dynamic Load Rating	Basic Static Load Rating	Static Rated Moment			Weight	
	H	H_1	N	W	B	B_1	C	C_1	L_1	L	G	K_1	K_2	T	T_1	H_2	H_3	M	W_R	H_R	D	h	d	P	E	(mm)	C (kN)	C_0 (kN)	M_R kN-m	M_P kN-m	M_Y kN-m	Block kg	Rail kg/m
CGW15CC	24	4.1	16	47	38	4.5	30	26	39.6	58.2	6	8.8	4.25	6	6.5	3.8	3.8	M5	15	16.2	7.5	5.9	4.5	60	20	M4x17	14.7	19.52	0.19	0.14	0.14	0.14	1.58
CGW20CC	30	4.65	21.5	63	53	5	40	35	52.5	74.9	6	10.45	5.5	6.5	7.7	3.7	4	M6	20	20.55	9.5	8.5	6	60	20	M5x19	23.7	30.51	0.37	0.28	0.28	0.36	2.48
CGW20HC	30	4.65	21.5	63	53	5	40	35	68.5	90.9	6	18.45	5.5	6.5	7.7	3.7	4	M6	20	20.55	9.5	8.5	6	60	20		28.6	39.9	0.48	0.48	0.48	0.47	2.48
CGW25CC	36	6.1	23.5	70	57	6.5	45	40	61	84	13	12.4	5	7	9.3	6	5.1	M8	23	24.25	11	9	7	60	20	M6x22	34.96	43.94	0.6	0.49	0.49	0.53	3.38
CGW25HC	36	6.1	23.5	70	57	6.5	45	40	78.4	101.4	13	21.1	5	7	9.3	6	5.1	M8	23	24.25	11	9	7	60	20		40.5	54.08	0.74	0.73	0.73	0.68	3.38
CGW30CC	42	7	31	90	72	9	52	44	69	97.4	13	13.75	8.7	10.5	12	6.7	6.7	M10	28	28.35	14	12	9	80	20	M8x25	46	55.19	0.95	0.7	0.7	0.9	5.1
CGW30HC	42	7	31	90	72	9	52	44	91.5	119.9	13	25	8.7	10.5	12	6.7	6.7	M10	28	28.35	14	12	9	80	20		58.59	78.18	1.35	1.23	1.23	1.19	5.1
CGW35CC	48	7.6	33	100	82	9	62	52	79	111.4	13	16.6	7	10.1	13.1	9	8.3	M10	34	31.85	14	12	9	80	20	M8x28	61.17	79.3	1.73	1.09	1.09	1.37	7.14
CGW35HC	48	7.6	33	100	82	9	62	52	103.4	135.8	13	28.8	7	10.1	13.1	9	8.3	M10	34	31.85	14	12	9	80	20		77.9	112.34	2.46	2.02	2.02	1.79	7.14
CGW45CC	60	9.7	37.5	120	100	10	80	60	97.2	137.6	13	13	8.7	13.5	15	8.5	8.5	M12	45	39.85	20	17	14	105	22.5	M12x37	98.43	112.66	3.56	2.35	2.35	2.45	11.51
CGW45HC	60	9.7	37.5	120	100	10	80	60	133.6	174	13	31.2	8.7	13.5	15	8.5	8.5	M12	45	39.85	20	17	14	105	22.5		125.58	159.6	5.05	4.45	4.45	3	11.51

Note : 1 kgf = 9.81 N

(5) Dimesions for CGR-T (Rail Mounting from Bottom)

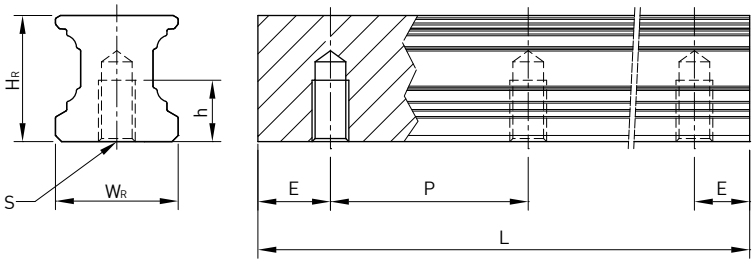

Size	Dimensions of Rail (mm)					
	W_R	H_R	S	h	P	E
CGR15T	15	16.2	M5X0.8P	8	60	20
CGR20T	20	20.55	M6X1P	10	60	20
CGR25T	23	24.25	M6X1P	12	60	20
CGR30T	28	28.35	M8X1.25P	15	80	20
CGR35T	34	31.85	M8X1.25P	17	80	20
CGR45T	45	39.85	M12X1.75P	24	105	22.5

(6) Dimension of cover strip and plastic end jig

- plastic end jig (standard)

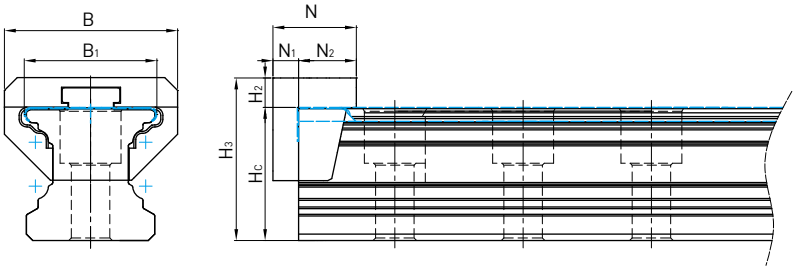

Size	H_3	H_c[1]	H_2	N	N_1	N_2	B	B_1
CG 15	20.8	16.4	4.4	13.0	3.7	9.3	20.0	15.8
CG 20	25.65	20.75	4.9	13.0	4.0	9.0	27.0	20.7
CG 25	29.55	24.45	5.1	15.0	4.2	10.8	31.5	23.9
CG 30	35.45	28.55	6.9	21.0	6.0	15.0	40.0	28.9
CG 35	40.75	32.05	8.7	21.5	6.2	15.3	46.0	34.8
CG 45	48.3	40.05	8.25	22.0	6.2	15.8	51.6	45.6

Note : 1. Dimension H_C with cover strip

- Metal end jig (optional)

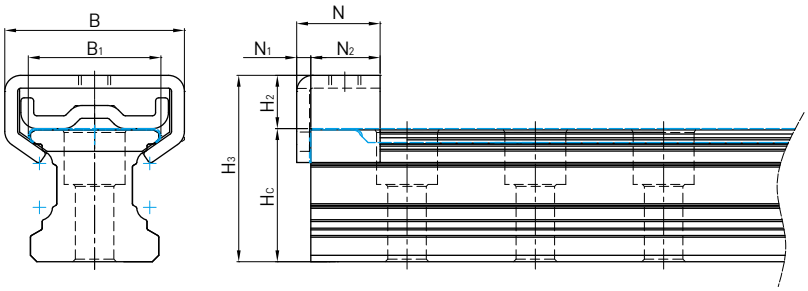

Size	H_3	H_c[1]	H_2	N	N_1	N_2	B	B_1
CG 15	20.09	16.4	3.69	15.0	2.2	12.8	21.0	15.8
CG 20	29.05	20.75	8.3	13.0	2.2	10.8	28.0	20.7
CG 25	34.42	24.45	9.97	15.0	2.2	12.8	30.6	23.9
CG 30	37.80	28.55	9.25	12.0	2.2	9.8	34.0	28.9
CG 35	43.2	32.05	11.15	18.0	2.2	15.8	35.4	34.8
CG 45	52.66	40.05	12.61	18.0	2.2	15.8	53.6	45.6

Note : 1. Dimension H_C with cover strip

2-9 RG Series – High Rigidity Roller Type Linear Guideway

2-9-1 Advantages and features

The new RG series from Hiwin features a roller as the rolling element instead of steel balls. The roller series offers super high rigidity and very high load capacities. The RG series is designed with a 45-degree angle of contact. Elastic deformation of the linear contact surface, during load, is greatly reduced thereby offering greater rigidity and higher load capacities in all 4 load directions.The RG series linear guideway offers high performance for high-precision manufacturing and achieving longer service life.

(1) Optimal design

FEM analysis was performed to determine the optimal structure of the block and the rail. The unique design of the circulation path allows the RG series linear guideway to offer smoother linear motion.

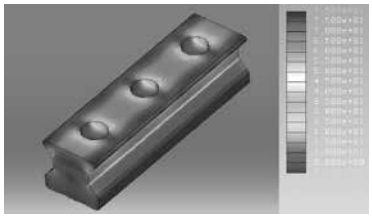

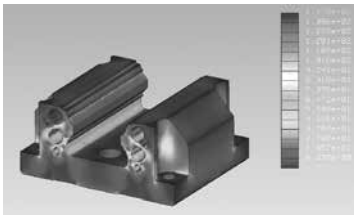

(2) Super high rigidity

The RG series is a type of linear guideway that uses rollers as the rolling elements. Rollers have a greater contact area than balls so that the roller guideway features higher load capacity and greater rigidity. The figure shows the rigidity of a roller and a ball with equal volume.

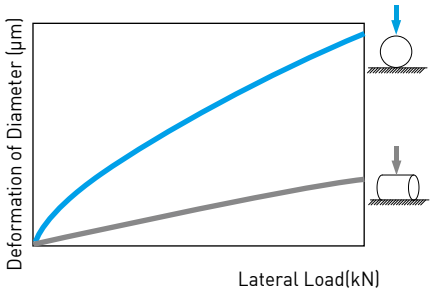

(3) Super high load capacity

With the four rows of rollers arranged at a contact angle of 45-degrees, the RG series linear guideway has equal load ratings in the radial, reverse radial and lateral directions. The RG series has a higher load capacity in a smaller size than conventional, ball-type linear guideways.

(4) Operating life increased

Compare with the ball element, the contact pressure of rolling element is distributed on the line region. Therefore, stress concentration was reduced siginificantly and the RG series offers longer running life. The nominal life of RG series can be calculated by using Eq.

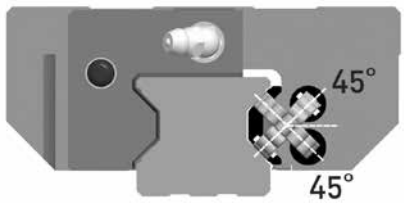

The acting load will affect the nominal life of a linear guideway. Based on the selected basic dynamic rated load and the actual load. The nominal life of ball type and roller type linear guideway can be calculated by Eq.2.5 respectively.

$$L = \left(\frac{C}{P}\right)^{\frac{10}{3}} \cdot 100\text{km} = \left(\frac{C}{P}\right)^{\frac{10}{3}} \cdot 62\text{mile} \qquad \text{Eq. 2.5}$$

If the environmental factors are taken into consideration, the nominal life is influenced greatly by the motion conditions, the hardness of the raceway, and the temperature of the linear guideway. The relationship between these factors is expressed in Eq.2.6.

$$L = \left(\frac{f_h \cdot f_t \cdot C}{f_w \cdot P}\right)^{\frac{10}{3}} \cdot 100\text{km} = \left(\frac{f_h \cdot f_t \cdot C}{f_w \cdot P}\right)^{\frac{10}{3}} \cdot 62\text{mile} \qquad \text{Eq. 2.6}$$

L : Nominal life
C : Basic dynamic load rating
P : Actual load

f_h : Hardness factor
f_t : Temperature factor
f_w : Load factor

RG Series

High Rigidity Roller Type

(5) Test Data

1. Nominal life test

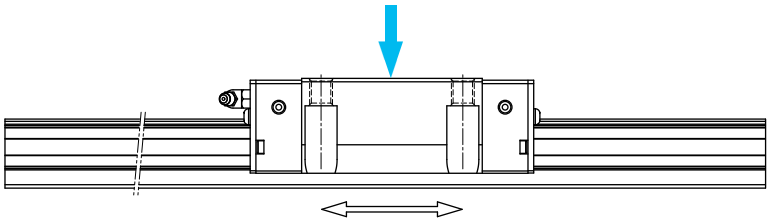

Model of the test system

Table 2-9-1

Tested model 1: RGH35CA	Test results:
Preload: ZA class Max. Speed: 60m/min Acceleration: 1G Stroke: 0.55m Lubrication: grease held every 100km External load: 15kN Traveling distance: 1135km	The nominal life of RGH35CA is 1000km. After traveling 1135km, fatigue flaking did not appear on the surface of the raceway or rollers.

2. Durability Test

Tested model 2: RGW35CC	Test results:
Preload: ZA class Max. Speed: 120m/min Acceleration: 1G Stroke: 2m Lubrication: oil feed rate: 0.3cm^3/hr External load: 0kN Traveling distance: 15000km	Fatigue flaking did not appear on the surface of the raceway or rollers after traveling 15000km.

Note: The data listed are from samples.

2-9-2 Construction of RG Series

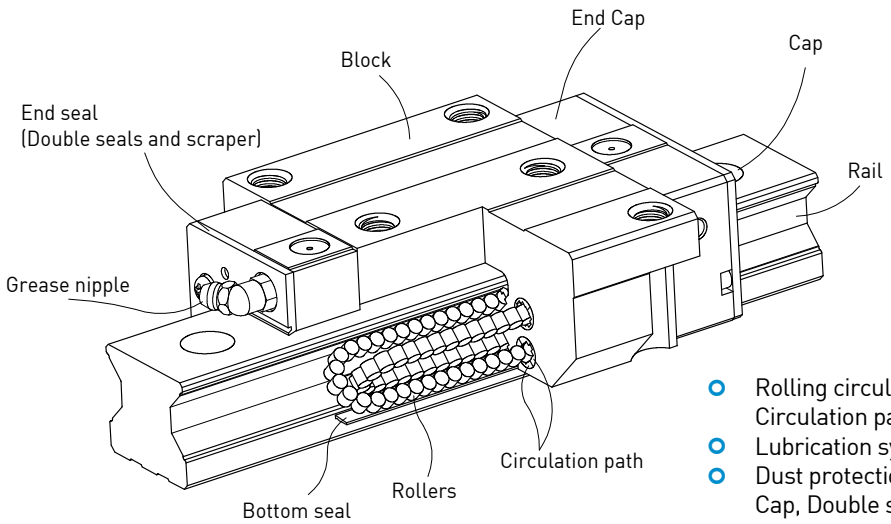

- Rolling circulation system: Block, Rail, End cap, Circulation path, rollers
- Lubrication system: Grease nipple and piping joint
- Dust protection system: End seal, Bottom seal, Cap, Double seals and Scraper

2-9-3 Model Number of RG series

RG series linear guideways are classified into non-interchangeable and interchangeable types. The sizes of these two types are the same as one another. The main difference is that the interchangeable type of blocks and rails can be freely exchanged and they can maintain P-class accuracy. Because of strict dimensional control, the interchangeable type linear guideways are a wise choice for customers when rails do not need to be matched for an axis. The model number of the RG series identifies the size, type, accuracy class, preload class, etc.

(1) Non-interchangeable type

RG W 35 C C E 2 R 1640 E ZA P II + KK/E2+RC

- RG Series
- Block Type
  - W : Flange Type
  - H : Square Type
  - L : Square Type (Low)[3]
  - S : Square (Ultra low)
  - F : Flange (Ultra low)
- Model size
  - 15,20,25, 30, 35, 45, 55, 65
- Load Type
  - C : Heavy Load
  - H : Super Heavy Load
- Block Mounting
  - A : Mounting From Top
  - C : Top or Bottom
- E: Special Block
  - None: Standard Block
- No. of Blocks per Rail
- Rail Mounting Type
  - R : Mounting From Top
  - T : Bottom
- Rail Length (mm)
- E: Special Rail
  - None: Standard Rail
- Preload Code: Z0, ZA, ZB
- Precision Code: H, P, SP, UP
- No. of Rails per matched set [1]
- Dust Protection[2]
- E2: Self-Lubricant[4]
- RC: Reinforced Cap

Note: 1. The roman numerals express a matched set of rails.
2. No symbol indicates standard protection (end seal and bottom seal).
ZZ : End seal, bottom seal and scraper
KK: Double seals, bottom seal and scraper.
DD: Double seals and bottom seal
3. Block type RGL is the low profile design of RGH (square type), the assembled height is same as RGW (flange type) in same size.
4. E2 does not apply to RGS/RGF.

(2) Interchangeable type

- **Model Number of RG Block**

RG W 25 C A E ZA P + ZZ/E2

- RG Series
- Block Type
  - W : Flange Type
  - H : Square Type
  - L : Square Type (Low)[3]
  - S : Square (Ultra low)
  - F : Flange (Ultra low)
- Model size
  - 15,20,25, 30, 35, 45, 55, 65
- Load Type
  - C : Heavy Load
  - H : Super Heavy Load
- Block Mounting Type
  - A : Mounting From Top
  - C : Top or Bottom
- E: Special Block
  - None: Standard block
- Preload Code : Z0, ZA
- Precision Code : H, P
- Dust Protection[2]
- E2: Self-Lubricant[4]

- **Model Number of RG Rail**

RG R 25 R 1240 E P + RC

- RG Series
- Interchangeable Rail
- Model size
  - 15,20,25, 30, 35, 45, 55, 65
- Rail Mounting Type
  - R : Mounting From Top
  - T : Bottom
- Rail Length (mm)
- E: Special Rail,
  - None: Standard Rail
- Precision Code : H, P
- RC:Reinforced Cap

RG Series

High Rigidity Roller Type

2-9-4 Types

(1) Block types

HIWIN offers two types of guide blocks, flange and square type. Because of the low assembly height and large mounting surface, the flange type is excellent for heavy moment load applications.

Table 2-9-2 **Block Types**

Type	Model	Shape	Height (mm)	Rail Length (mm)	Main Applications
Square	RGH-CA RGH-HA	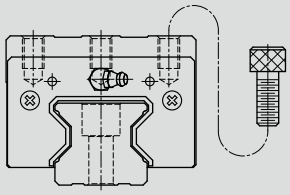	28 ↓ 90	100 ↓ 4000	○ Automation Systems ○ Transportation equipment ○ CNC machining centers ○ Heavy duty cutting machines ○ CNC grinding machines ○ Injection molding machines ○ Plano millers ○ Devices requiring high rigidity ○ Devices requiring high load capacity ○ Electric discharge machines
Square (low)	RGL-CA RGL-HA	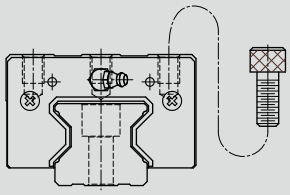	24 ↓ 70	100 ↓ 4000	
Square (Ultra low)	RGS-CA RGS-HA	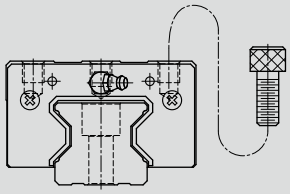	44 ↓ 52	100 ↓ 4000	
Flange	RGW-CC RGW-HC	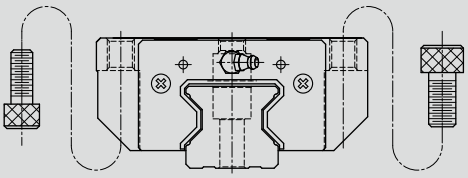	24 ↓ 90	100 ↓ 4000	
Flange (Ultra low)	RGF-CC RGF-HC	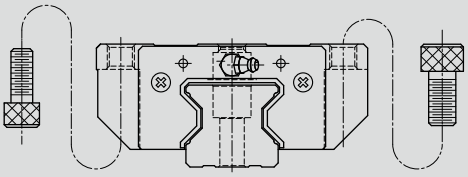	44 ↓ 52	100 ↓ 4000	

(2) Rail types

In addition to the standard top mounting type, HIWIN also offers the bottom mounting type of rails.

Table 2-9-3 **Rail Types**

Mounting from Top	Mounting from Bottom
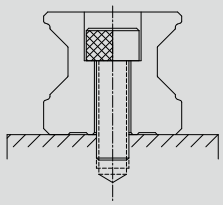	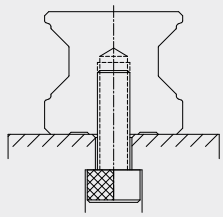

2-9-5 Accuracy Classes

The accuracy of the RG series can be classified into four classes: high (H), precision (P), super precision (SP) and ultra precision (UP). Customers may choose the class by referencing the accuracy requirements of the applied equipment.

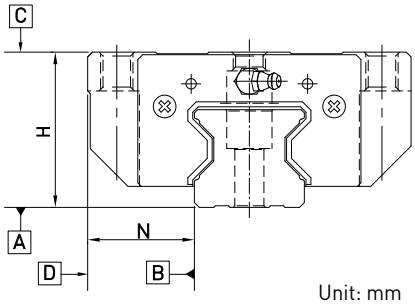

(1) Accuracy of non-interchangeable

Table 2-9-4 **Accuracy Standards**

Unit: mm

Item	RG - 15, 20			
Accuracy Classes	High (H)	Precision (P)	Super Precision (SP)	Ultra Precision (UP)
Dimensional tolerance of height H	± 0.03	0 - 0.03	0 - 0.015	0 - 0.008
Dimensional tolerance of width N	± 0.03	0 - 0.03	0 - 0.015	0 - 0.008
Variation of height H	0.01	0.006	0.004	0.003
Variation of width N	0.01	0.006	0.004	0.003
Running parallelism of block surface C to surface A	See Table 2-9-12			
Running parallelism of block surface D to surface B	See Table 2-9-12			

Table 2-9-5 **Accuracy Standards**

Unit: mm

Item	RG - 25, 30, 35			
Accuracy Classes	High (H)	Precision (P)	Super Precision (SP)	Ultra Precision (UP)
Dimensional tolerance of height H	± 0.04	0 - 0.04	0 - 0.02	0 - 0.01
Dimensional tolerance of width N	± 0.04	0 - 0.04	0 - 0.02	0 - 0.01
Variation of height H	0.015	0.007	0.005	0.003
Variation of width N	0.015	0.007	0.005	0.003
Running parallelism of block surface C to surface A	See Table 2-9-12			
Running parallelism of block surface D to surface B	See Table 2-9-12			

RG Series

High Rigidity Roller Type

Table 2-9-6 **Accuracy Standards** Unit: mm

Item	RG - 45, 55			
Accuracy Classes	High (H)	Precision (P)	Super Precision (SP)	Ultra Precision (UP)
Dimensional tolerance of height H	± 0.05	0 - 0.05	0 - 0.03	0 - 0.02
Dimensional tolerance of width N	± 0.05	0 - 0.05	0 - 0.03	0 - 0.02
Variation of height H	0.015	0.007	0.005	0.003
Variation of width N	0.02	0.01	0.007	0.005
Running parallelism of block surface C to surface A	See Table 2-9-12			
Running parallelism of block surface D to surface B	See Table 2-9-12			

Table 2-9-7 **Accuracy Standards** Unit: mm

Item	RG - 65			
Accuracy Classes	High (H)	Precision (P)	Super Precision (SP)	Ultra Precision (UP)
Dimensional tolerance of height H	± 0.07	0 - 0.07	0 - 0.05	0 - 0.03
Dimensional tolerance of width N	± 0.07	0 - 0.07	0 - 0.05	0 - 0.03
Variation of height H	0.02	0.01	0.007	0.005
Variation of width N	0.025	0.015	0.01	0.007
Running parallelism of block surface C to surface A	See Table 2-9-12			
Running parallelism of block surface D to surface B	See Table 2-9-12			

(2) Accuracy of interchangeable

Table 2-9-8 **Accuracy Standards** Unit: mm

Item	RG - 15, 20	
Accuracy Classes	High (H)	Precision (P)
Dimensional tolerance of height H	± 0.03	± 0.015
Dimensional tolerance of width N	± 0.03	± 0.015
Variation of height H	0.01	0.006
Variation of width N	0.01	0.006
Running parallelism of block surface C to surface A	See Table 2-9-12	
Running parallelism of block surface D to surface B	See Table 2-9-12	

Table 2-9-9 **Accuracy Standards** Unit: mm

Item	RG - 25, 30, 35	
Accuracy Classes	High (H)	Precision (P)
Dimensional tolerance of height H	± 0.04	± 0.02
Dimensional tolerance of width N	± 0.04	± 0.02
Variation of height H	0.015	0.007
Variation of width N	0.015	0.007
Running parallelism of block surface C to surface A	See Table 2-9-12	
Running parallelism of block surface D to surface B	See Table 2-9-12	

Table 2-9-10 **Accuracy Standards**

Unit: mm

Item	RG - 45, 55	
Accuracy Classes	High (H)	Precision (P)
Dimensional tolerance of height H	± 0.05	± 0.025
Dimensional tolerance of width N	± 0.05	± 0.025
Variation of height H	0.015	0.007
Variation of width N	0.02	0.01
Running parallelism of block surface C to surface A	See Table 2-9-12	
Running parallelism of block surface D to surface B	See Table 2-9-12	

Table 2-9-11 **Accuracy Standards**

Unit: mm

Item	RG - 65	
Accuracy Classes	High (H)	Precision (P)
Dimensional tolerance of height H	± 0.07	± 0.035
Dimensional tolerance of width N	± 0.07	± 0.035
Variation of height H	0.02	0.01
Variation of width N	0.025	0.015
Running parallelism of block surface C to surface A	See Table 2-9-12	
Running parallelism of block surface D to surface B	See Table 2-9-12	

(3) Accuracy of running parallelism

Table 2-9-12 **Accuracy of Running Parallelism**

Rail Length (mm)	Accuracy (μm)			
	H	P	SP	UP
~ 100	7	3	2	2
100 ~ 200	9	4	2	2
200 ~ 300	10	5	3	2
300 ~ 500	12	6	3	2
500 ~ 700	13	7	4	2
700 ~ 900	15	8	5	3
900 ~ 1,100	16	9	6	3
1,100 ~ 1,500	18	11	7	4
1,500 ~ 1,900	20	13	8	4
1,900 ~ 2,500	22	15	10	5
2,500 ~ 3,100	25	18	11	6
3,100 ~ 3,600	27	20	14	7
3,600 ~ 4,000	28	21	15	7

RG Series

High Rigidity Roller Type

2-9-6 Preload

A preload can be applied to each guideway using oversized rollers. Generally, a linear motion guideway has negative clearance between the raceway and rollers to improve stiffness and maintain high precision. The RG series linear guideway offers three standard preloads for various applications and conditions.

Table 2-9-13

Class	Code	Preload	Condition
Light Preload	Z0	0.02C~ 0.04C	Certain load direction, low impact, low precision required
Medium Preload	ZA	0.07C~0.09C	High rigidity required, high precision required
Heavy Preload	ZB	0.12C~ 0.14C	Super high rigidity required, with vibration and impact

The figure shows the relationship between the rigidity, friction and nominal life. A preload no larger than ZA would be recommended for smaller model sizes to avoid over-preload affecting the life of the guideway.

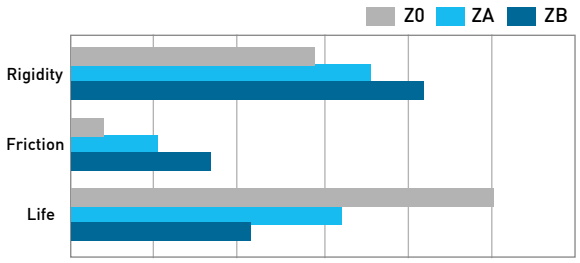

Stiffness performance

Stiffness depends on preload. The following table shows stiffness value of each size.

Table 2-9-14 **Radial stiffness for RG Series**

Load type	Series / Size	Stiffness (N/μm)		
		Z0	ZA	ZB
Heavy load	RG 15C	508	727	788
	RG 20C	625	853	950
	RG 25C	692	954	1196
	RG 30C	882	1082	1333
	RG 35C	1059	1247	1547
	RG 45C	1642	1851	2332
	RG 55C	1784	2053	2506
	RG 65C	2564	2900	3482
Super heavy load	RG 20H	840	1160	1279
	RG 25H	887	1242	1549
	RG 30H	1125	1391	1711
	RG 35H	1412	1757	2144
	RG 45H	2207	2511	3172
	RG 55H	2459	2858	3538
	RG 65H	3560	4064	4937

2-9-7 Lubrication

(1) Grease

Grease nipple

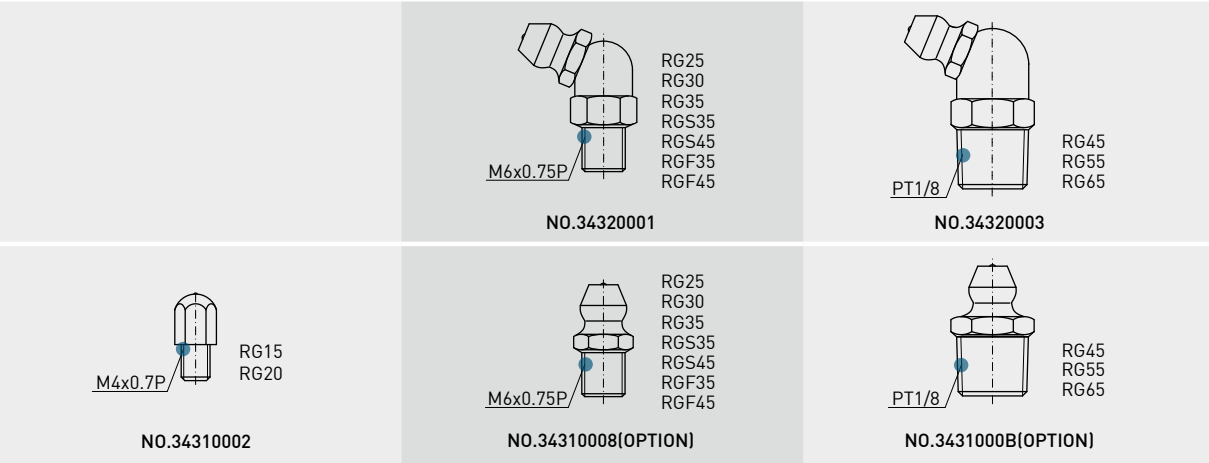

Mounting location

The standard location of the grease fitting is at both ends of the block, but the nipple can be mounted in the side or the top of block. For lateral installation, we recommend that the nipple be mounted at the non-reference side, otherwise please contact us. It is possible to carry out the lubrication by using an oil-piping joint. The figure shows the locations of the grease fitting.

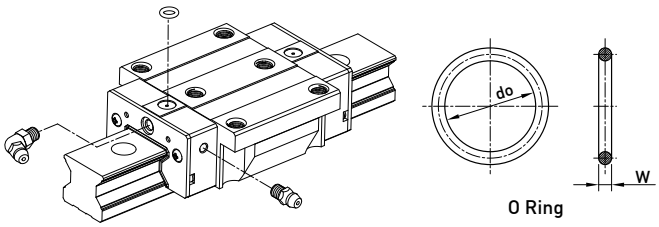

Table 2-9-15 **O-Ring size and max. permissible depth for piercing**

Size	O-Ring		Lube hole at top: max. permissible depth for piercing
	do (mm)	W (mm)	T_{max} (mm)
RG15	2.5±0.15	1.5±0.15	3.45
RG20	2.5±0.15	1.5±0.15	4
RG25	7.5±0.15	1.5±0.15	5.8
RG30	7.5±0.15	1.5±0.15	6.2
RG35	7.5±0.15	1.5±0.15	8.65
RG45	7.5±0.15	1.5±0.15	9.5
RG55	7.5±0.15	1.5±0.15	11.6
RG65	7.5±0.15	1.5±0.15	14.5

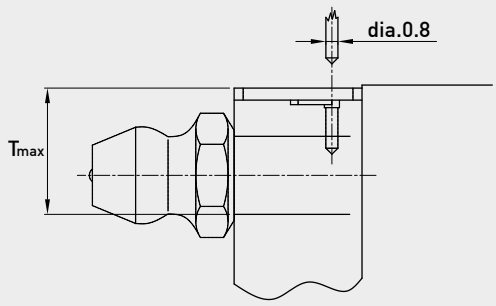

The oil amount for a block filled with grease

Table 2-9-16 **The oil amount for a block filled with grease**

Size	Heavy Load(cm³)	Super Heavy Load(cm³)	Size	Heavy Load(cm³)	Super Heavy Load(cm³)
RG15	3	-	RG35	12	14
RG20	5	6	RG45	19	23
RG25	7	8	RG55	28	35
RG30	9	10	RG65	52	63

Frequency of replenishment

Check the grease every 100 km, or every 3-6 months.

RG Series

High Rigidity Roller Type

(2) Oil

The recommended viscosity of oil is about 32~150cSt. If you need to use oil-type lubrication, please inform us.

Types of oil piping joint

LF-64

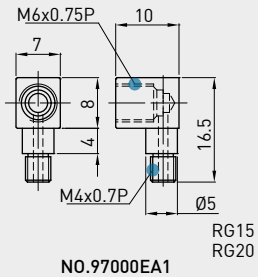

NO.97000EA1

LF-76

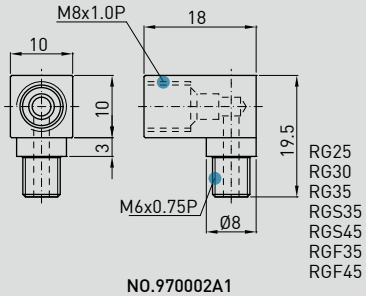

NO.970002A1

LF-78

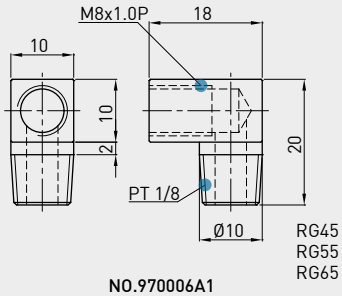

NO.970006A1

LF-86

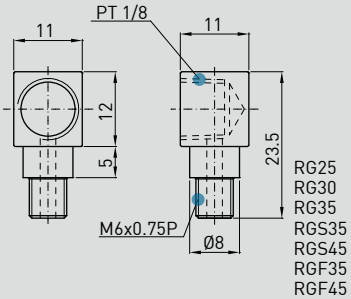

NO.970004A1

LF-88

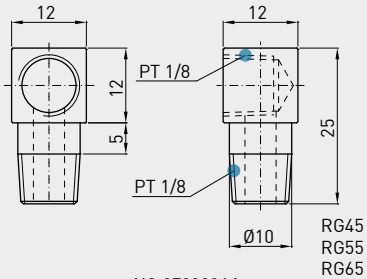

NO.970008A1

SF-76

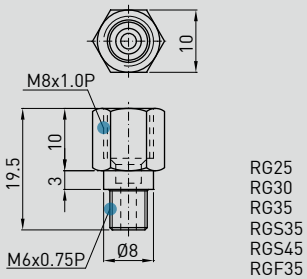

NO.970001A1

SF-78

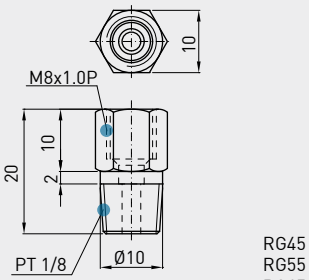

NO.970005A1

SF-86

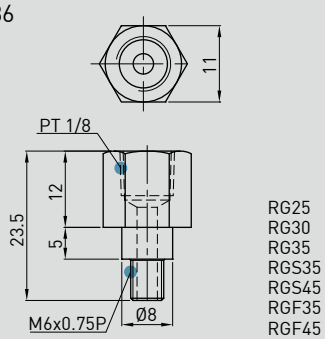

NO.970003A1

SF-88

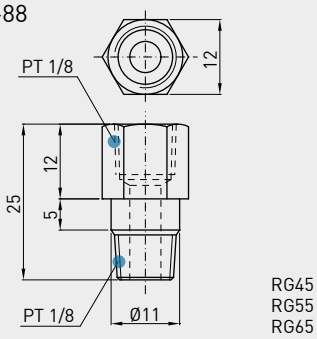

NO.970007A1

Oil feeding rate

Table 2-9-17 **oil feed rate**

Size	Feed rate (cm³/hr)	Size	Feed rate (cm³/hr)
RG15	0.14	RG35	0.23
RG20	0.14	RG45	0.3
RG25	0.167	RG55	0.367
RG30	0.2	RG65	0.433

2-9-8 Dust Proof Accessories

(1) Codes of accessories

If the following accessories are needed, please add the code followed by the model number.

Table 2-9-18

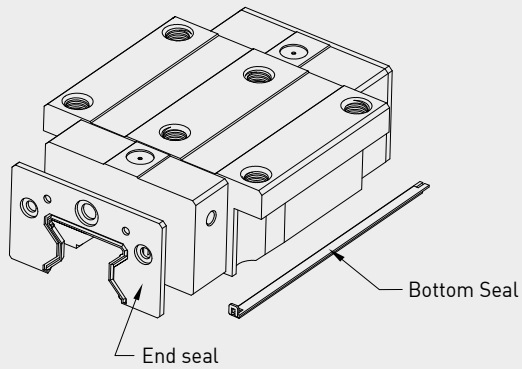

No symbol: Standard Protection (End seal + Bottom Seal)

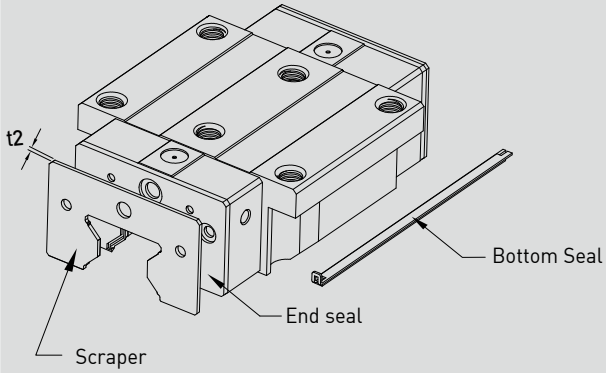

ZZ (End seal + Bottom Seal + Scraper)

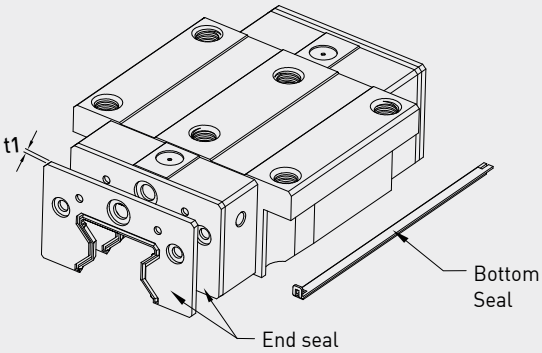

DD (Double seals + Bottom Seal)

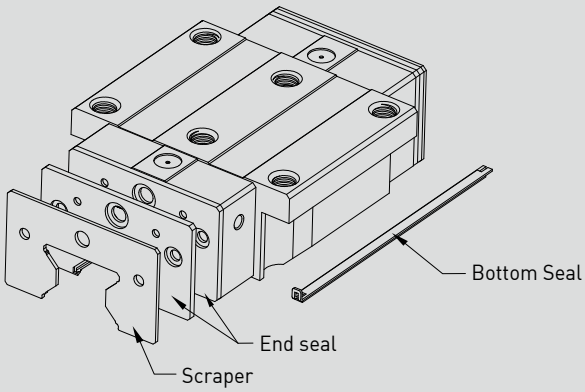

KK (Double seals + Bottom Seal + Scraper)

(2) End seal and bottom seal

To prevent life reduction caused by iron chips or dust entering the block.

(3) Double seals

Enhances the wiping effect, foreign matter can be completely wiped off.

Table 2-9-19 **Dimensions of end seal**

Size	Thickness (t1) (mm)	Size	Thickness (t1) (mm)
RG15 ES	2.2	RG35 ES	2.5
RG20 ES	2.2	RG45 ES	3.6
RG25 ES	2.2	RG55 ES	3.6
RG30 ES	2.4	RG65 ES	4.4

RG Series

High Rigidity Roller Type

(4) Scraper

The scraper removes high-temperature iron chips and larger foreign objects.

Table 2-9-20 **Dimensions of scraper**

Size	Thickness (t2) (mm)	Size	Thickness (t2) (mm)
RG15 SC	1.0	RG35 SC	1.5
RG20 SC	1.0	RG45 SC	1.5
RG25 SC	1.0	RG55 SC	1.5
RG30 SC	1.5	RG65 SC	1.5

(5) Bolt caps for rail mounting holes

Caps are used to cover the mounting holes to prevent chips or other foreign objects from collecting in the holes. The caps will be enclosed in each rail package.

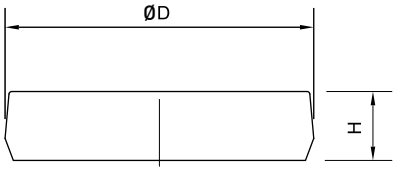

Table 2-9-21 **Dimensions of Bolt Caps for Rail Mounting Holes**

Rail size	Bolt size	Diameter(D) (mm)	Thickness(H) (mm)	Rail size	Bolt size	Diameter(D) (mm)	Thickness(H) (mm)
RGR15	M4	7.65	1.1	RGR35	M8	14.20	3.5
RGR20	M5	9.65	2.5	RGR45	M12	20.25	4.5
RGR25	M6	11.15	2.5	RGR55	M14	23.25	5
RGR30	M8	14.2	3.5	RGR65	M16	26.35	5

(6) Dimensions of block equipped with the dustproof parts

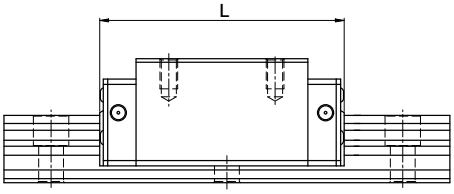

Table 2-9-22 **Overall block length**

unit: mm

Size	Overall block length (L)			
	SS	ZZ	DD	KK
RG15C	68.0 (70.4)	70.0 (74.4)	72.4 (74.8)	74.4 (78.8)
RG20C	86.0 (88.4)	88.0 (92.4)	90.4 (92.8)	92.4 (96.8)
RG20H	106.0 (108.4)	108.0 (112.4)	110.4 (112.8)	112.4 (116.8)
RG25C	97.9 (101.5)	99.9 (105.9)	102.3 (105.9)	104.3 (110.3)
RG25H	114.4 (118)	116.4 (122.4)	118.8 (122.4)	120.8 (126.8)
RG30C	109.8 (113.4)	112.8 (118.8)	114.6 (118.2)	117.6 (123.6)
RG30H	131.8 (135.4)	134.8 (140.8)	136.6 (140.2)	139.6 (145.6)
RG35C	124.0 (129.4)	127.0 (135.0)	129.0 (134.4)	132.0 (140.0)
RG35H	151.5 (156.9)	154.5 (162.5)	156.5 (161.9)	159.5 (167.5)
RG45C	153.2 (156.4)	156.2 (164.2)	160.4 (163.6)	163.4 (171.4)
RG45H	187.0 (190.2)	190.0 (198.0)	194.2 (197.4)	197.2 (205.2)
RG55C	183.7 (186.9)	186.7 (194.7)	190.9 (194.1)	193.9 (201.9)
RG55H	232.0 (235.2)	235.0 (243.0)	239.2 (242.4)	242.2 (250.2)
RG65C	232.0 (236.0)	235.0 (245.0)	240.8 (244.8)	243.8 (253.8)
RG65H	295.0 (299.0)	298.0 (308.0)	303.8 (307.8)	306.8 (316.8)

Note : The marking of "( )" denotes the maximum block length with screws, lips of end seals, etc.

2-9-9 Friction

The maximum value of resistance per end seal are as shown in the table.

Table 2-9-23 **Seal Resistance**

Size	Resistance N (kgf)	Size	Resistance N (kgf)
RG15	2.45 (0.25)	RG35	4.61 (0.47)
RG20	2.9 (0.3)	RG45	4.91 (0.5)
RG25	3.43 (0.35)	RG55	5.89 (0.6)
RG30	4.22 (0.43)	RG65	7.36 (0.75)

Note: 1. 1kgf=9.81N
2. Please inform HIWIN if low friction request is required.

2-9-10 The Accuracy Tolerance of Mounting Surface

(1) The accuracy tolerance of rail-mounting surface

As long as the accuracy requirements of the mounting surfaces shown in the following tables are met, the high accuracy, high rigidity and long life of the RG series linear guideway will be maintained without any difficulty.

- **The parallelism tolerance of reference surface (P)**

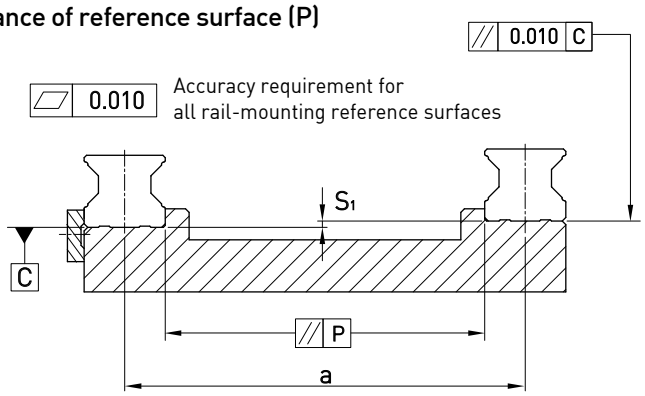

Table 2-9-24 **Max. Parallelism Tolerance (P)**

unit: μm

Size	Preload classes		
	Light Preload (Z0)	Medium Preload (ZA)	Heavy Preload (ZB)
RG15	5	3	3
RG20	8	6	4
RG25	9	7	5
RG30	11	8	6
RG35	14	10	7
RG45	17	13	9
RG55	21	14	11
RG65	27	18	14

- **The accuracy tolerance of reference surface height (S_1)**

$$S_1 = a \times K - T_H$$

S_1 : Max. tolerance of height
a : Distance between paired rails
K : Coefficient of tolerance of height

Table 2-9-25 **Coefficient of tolerance of height**

Size	Preload classes		
	Light Preload (Z0)	Medium Preload (ZA)	Heavy Preload (ZB)
K	2.2×10^{-4}	1.7×10^{-4}	1.2×10^{-4}

RG Series

High Rigidity Roller Type

(2) The accuracy tolerance of block-mounting surface

- The tolerance of the height of reference surface when two or more pieces are used in parallel (S_2)

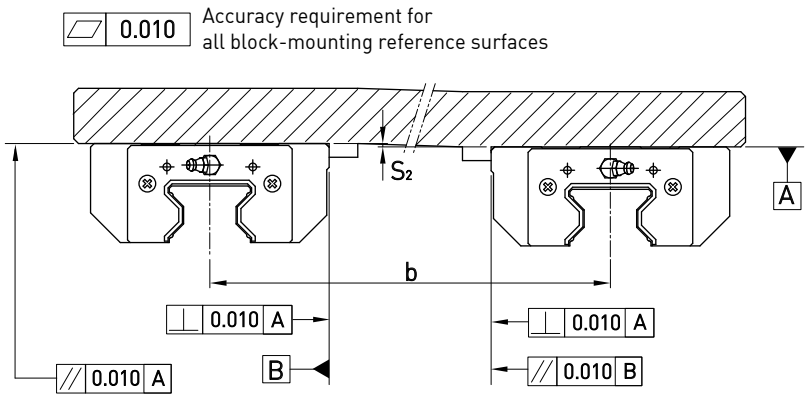

$$S_2 = b \times 4.2 \times 10^{-5}$$

S_2 : Max. tolerance of height
b : Distance between paired blocks

- The tolerance of the height of reference surface when two or more pieces are used in parallel (S_3)

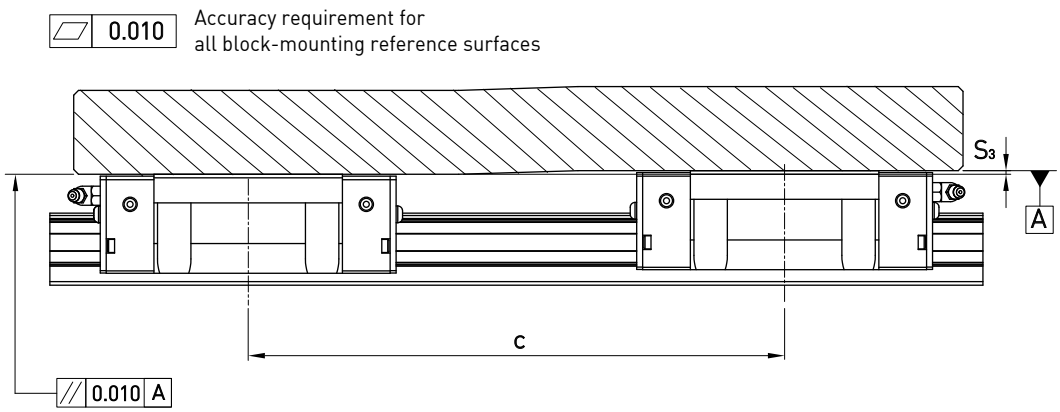

$$S_3 = c \times 4.2 \times 10^{-5}$$

S_3 : Max. tolerance of height
c : Distance between paired blocks

2-9-11 Cautions for Installation

(1) Shoulder heights and fillets

IImproper shoulder heights and fillets of mounting surfaces will cause a deviation in accuracy and the interference with the rail or block. As long as the recommended shoulder heights and fillets are followed, installation inaccuracies should be eliminated.

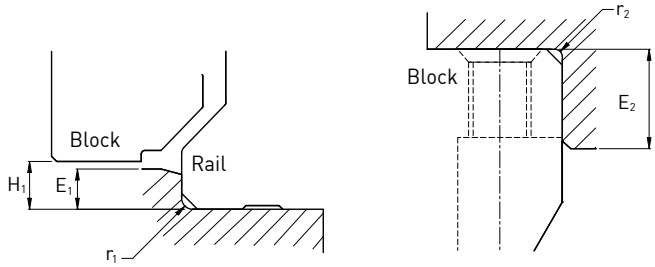

Table 2-9-26

Size	Max. radius of fillets r_1 (mm)	Max. radius of fillets r_2 (mm)	Shoulder height beside the rail E_1 (mm)	Shoulder height beside the block E_2 (mm)	Clearance under block H_1 (mm)
RG15	0.5	0.5	3	4	4
RG20	0.5	0.5	3.5	5	5
RG25	1.0	1.0	5	5	5.5
RG30	1.0	1.0	5	5	6
RG35	1.0	1.0	6	6	6.5
RG45	1.0	1.0	7	8	8
RG55	1.5	1.5	9	10	10
RG65	1.5	1.5	10	10	12

(2) Tightening Torque of Mounting Bolts

Improper tightening of mounting bolts will seriously influence the accuracy of a linear guideway. The following tightening torque for the different sizes of bolt is recommended.

Table 2-9-27

Size	Bolt size	Torque N-cm(kgf-cm)		
		Iron	Casting	Aluminum
RG15	M4×0.7P×16L	392 (40)	274 (28)	206 (21)
RG20	M5×0.8P×20L	883 (90)	588 (60)	441 (45)
RG25	M6×1P×20L	1373 (140)	921 (94)	686 (70)
RG30	M8×1.25P×25L	3041 (310)	2010 (205)	1470 (150)
RG35	M8×1.25P×25L	3041 (310)	2010 (205)	1470 (150)
RG45	M12×1.75P×35L	11772 (1200)	7840 (800)	5880 (600)
RG55	M14×2P×45L	15696 (1600)	10500 (1100)	7840 (800)
RG65	M16×2P×50L	19620 (2000)	13100 (1350)	9800 (1000)

RG Series

High Rigidity Roller Type

2-9-12 Standard and Maximum Lengths of Rail

HIWIN offers a number of standard rail lengths. Standard rail lengths feature end mounting hole placements set to predetermined values (E). For non-standard rail lengths, be sure to specify the E-value to be no greater than 1/2 the pitch (P) dimension. An E-value greater than this will result in unstable rail ends.

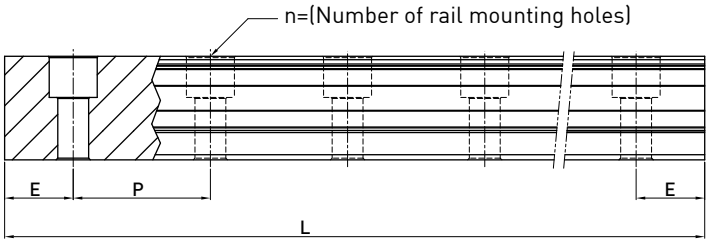

Table 2-9-28

unit: mm

Item	RGR15	RGR20	RGR25	RGR30	RGR35	RGR45	RGR55	RGR65
Standard Length L(n)	160 (5)	220 (7)	220 (7)	280 (7)	280 (7)	570 (11)	780 (13)	1,270 (17)
	220 (7)	280 (9)	280 (9)	440 (11)	440 (11)	885 (17)	1020 (17)	1,570 (21)
	340 (11)	340 (11)	340 (11)	600 (15)	600 (15)	1,200 (23)	1,260 (21)	2,020 (27)
	460 (15)	460 (15)	460 (15)	760 (19)	760 (19)	1,620 (31)	1,500 (25)	2,620 (35)
	580 (19)	640 (21)	640 (21)	1,000 (25)	1,000 (25)	2,040 (39)	1,980 (33)	-
	700 (23)	820 (27)	820 (27)	1,640 (41)	1,640 (41)	2,460 (47)	2,580 (43)	-
	940 (31)	1000 (33)	1,000 (33)	2,040 (51)	2,040 (51)	2,985 (57)	2,940 (49)	
	1120 (37)	1180 (39)	1,240 (41)	2,520 (63)	2,520 (63)	3,090 (59)	3,060 (51)	-
	1360 (45)	1360 (45)	1,600 (53)	3,000 (75)	3,000 (75)	-	-	-
Pitch (P)	30	30	30	40	40	52.5	60	75
Distance to End (E_s)	20	20	20	20	20	22.5	30	35
Max. Standard Length	4,000 (133)	4,000 (133)	4,000 (133)	4,000 (100)	4,000 (100)	3,982.5 (76)	3,960 (66)	3,970 (53)
Max. Length	4,000	4,000	4,000	4,000	4,000	4,000	4,000	4,000

Note : 1. Tolerance of E value for standard rail is 0.5~-0.5 mm. Tolerance of E value for jointed rail is 0~-0.3 mm.
2. Maximum standard length means the max. rail length with standard E value on both sides.
3. If different E value is needed, please contact HIWIN.

2-9-13 Dimensions for RG series

(1) RGH-CA / RGH-HA

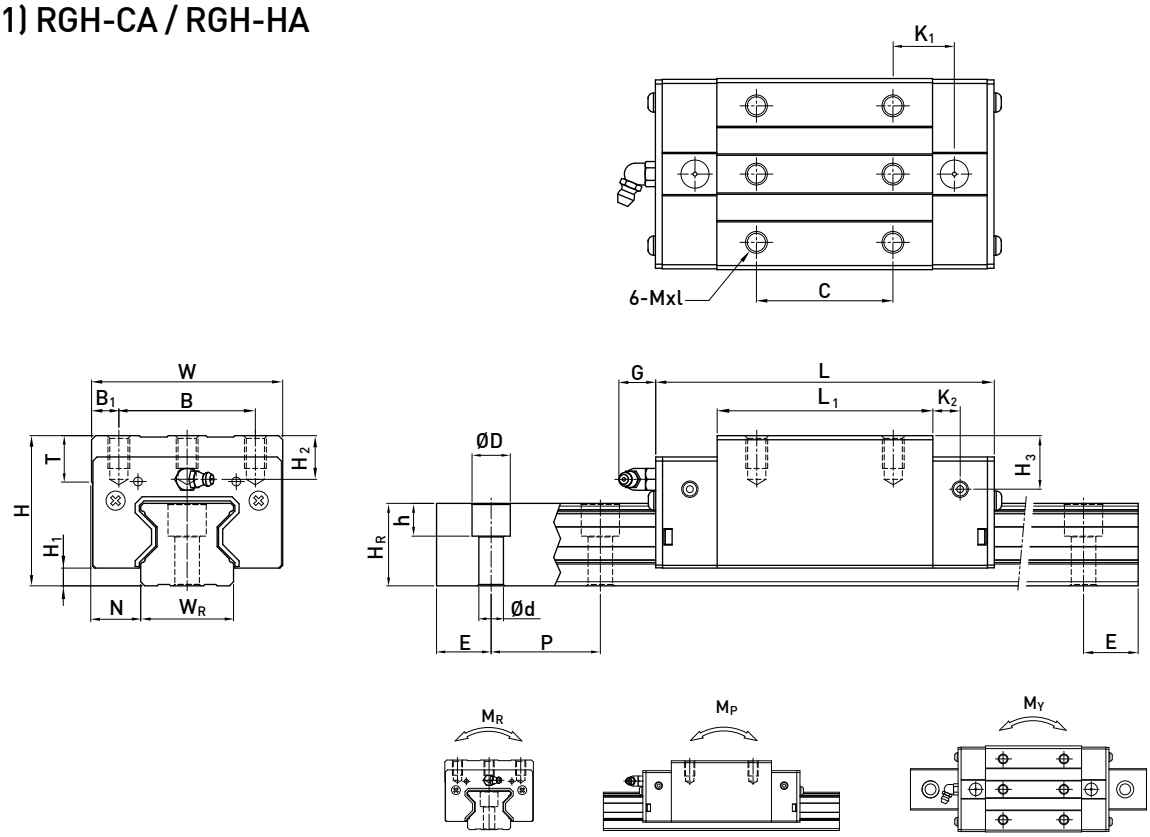

Model No.	Dimensions of Assembly (mm)			Dimensions of Block (mm)													Dimensions of Rail (mm)							Mounting Bolt for Rail	Basic Dynamic Load Rating	Basic Static Load Rating	Static Rated Moment			Weight	
	H	H_1	N	W	B	B_1	C	L_1	L	K_1	K_2	G	Mxl	T	H_2	H_3	W_R	H_R	D	h	d	P	E	(mm)	C(kN)	C_0 (kN)	M_R kN-m	M_P kN-m	M_Y kN-m	Block kg	Rail kg/m
RGH15CA	28	4	9.5	34	26	4	26	45	68	13.4	4.7	5.3	M4 x 8	6	7.6	10.1	15	16.5	7.5	5.7	4.5	30	20	M4 x16	11.3	24	0.311	0.173	0.173	0.20	1.8
RGH20CA	34	5	12	44	32	6	36	57.5	86	15.8	6	5.3	M5 x 8	8	8.3	8.3	20	21	9.5	8.5	6	30	20	M5 x20	21.3	46.7	0.647	0.46	0.46	0.40	2.76
RGH20HA							50	77.5	106	18.8															26.9	63	0.872	0.837	0.837	0.53	
RGH25CA	40	5.5	12.5	48	35	6.5	35	64.5	97.9	20.75	7.25	12	M6 x 8	9.5	10.2	10	23	23.6	11	9	7	30	20	M6 x20	27.7	57.1	0.758	0.605	0.605	0.61	3.08
RGH25HA							50	81	114.4	21.5															33.9	73.4	0.975	0.991	0.991	0.75	
RGH30CA	45	6	16	60	40	10	40	71	109.8	23.5	8	12	M8 x10	9.5	9.5	10.3	28	28	14	12	9	40	20	M8 x25	39.1	82.1	1.445	1.06	1.06	0.90	4.41
RGH30HA							60	93	131.8	24.5															48.1	105	1.846	1.712	1.712	1.16	
RGH35CA	55	6.5	18	70	50	10	50	79	124	22.5	10	12	M8 x12	12	16	19.6	34	30.2	14	12	9	40	20	M8 x25	57.9	105.2	2.17	1.44	1.44	1.57	6.06
RGH35HA							72	106.5	151.5	25.25															73.1	142	2.93	2.6	2.6	2.06	
RGH45CA	70	8	20.5	86	60	13	60	106	153.2	31	10	12.9	M10x17	16	20	24	45	38	20	17	14	52.5	22.5	M12 x35	92.6	178.8	4.52	3.05	3.05	3.18	9.97
RGH45HA							80	139.8	187	37.9															116	230.9	6.33	5.47	5.47	4.13	
RGH55CA	80	10	23.5	100	75	12.5	75	125.5	183.7	37.75	12.5	12.9	M12x18	17.5	22	27.5	53	44	23	20	16	60	30	M14 x45	130.5	252	8.01	5.4	5.4	4.89	13.98
RGH55HA							95	173.8	232	51.9															167.8	348	11.15	10.25	10.25	6.68	
RGH65CA	90	12	31.5	126	76	25	70	160	232	60.8	15.8	12.9	M16 x20	25	15	15	63	53	26	22	18	75	35	M16x50	213	411.6	16.20	11.59	11.59	8.89	20.22
RGH65HA							120	223	295	67.3															275.3	572.7	22.55	22.17	22.17	12.13	

Note : 1. 1 kgf = 9.81 N
2. The theoretical dynamic rated load is C_{100R}, if necessary C_{50R} conversion formula is as follows : $C_{50R} = 1.23 \times C_{100R}$

RG Series

High Rigidity Roller Type

(2) RGL-CA / RGL-HA

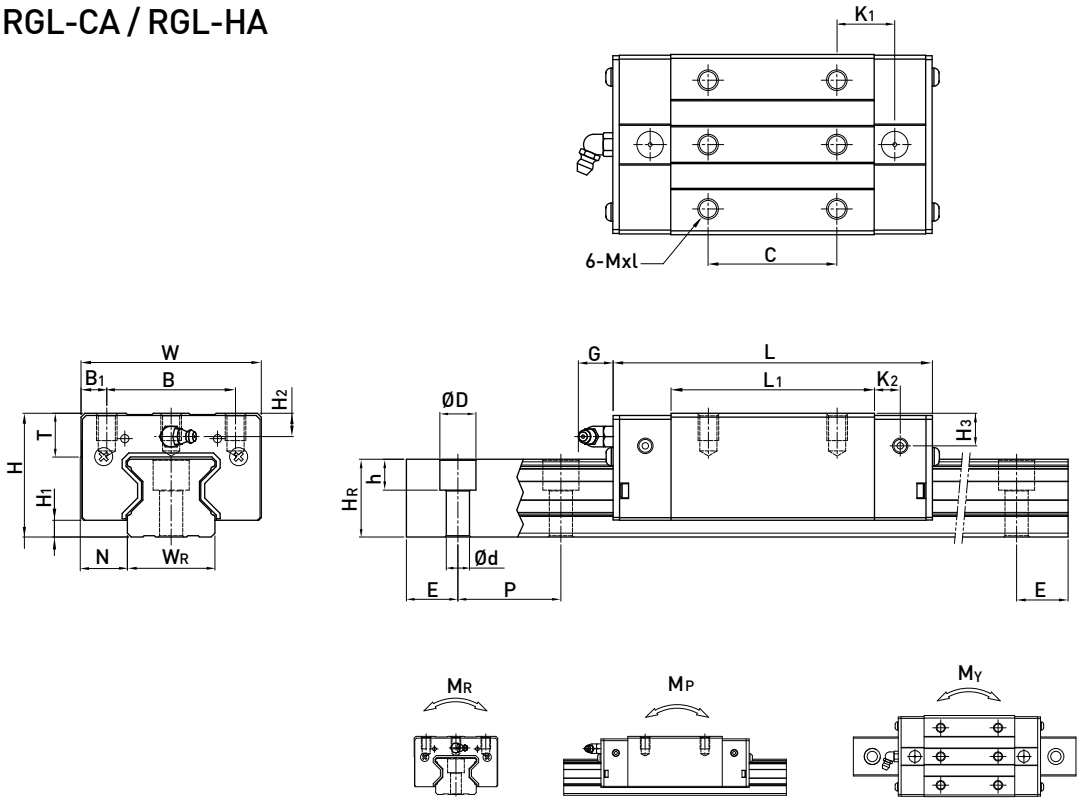

Model No.	Dimensions of Assembly (mm)			Dimensions of Block (mm)													Dimensions of Rail (mm)							Mounting Bolt for Rail	Basic Dynamic Load Rating	Basic Static Load Rating	Static Rated Moment			Weight	
	H	H_1	N	W	B	B_1	C	L_1	L	K_1	K_2	G	Mxl	T	H_2	H_3	W_R	H_R	D	h	d	P	E	(mm)	C(kN)	C_0 (kN)	M_R kN-m	M_P kN-m	M_Y kN-m	Block kg	Rail kg/m
RGL15CA	24	4	9.5	34	26	4	26	45	68	13.4	4.7	5.3	M4X5.5	6	3.6	6.1	15	16.5	7.5	5.7	4.5	30	20	M4x16	11.3	24	0.311	0.173	0.173	0.15	1.8
RGL20CA	30	5	12	44	32	6	36	57.5	86	15.8	6	5.3	M5X6	8	4.3	4.3	20	21	9.5	8.5	6	30	20	M5x20	21.3	46.7	0.647	0.46	0.46	0.32	2.76
RGL20HA							50	77.5	106	18.8															26.9	63	0.872	0.837	0.837	0.42	
RGL25CA	36	5.5	12.5	48	35	6.5	35	64.5	97.9	20.75	7.25	12	M6x8	9.5	6.2	6	23	23.6	11	9	7	30	20	M6x20	27.7	57.1	0.758	0.605	0.605	0.51	3.08
RGL25HA							50	81	114.4	21.5															33.9	73.4	0.975	0.991	0.991	0.63	
RGL30CA	42	6	16	60	40	10	40	71	109.8	23.5	8	12	M8x10	9.5	6.5	7.3	28	28	14	12	9	40	20	M8x25	39.1	82.1	1.445	1.06	1.06	0.80	4.41
RGL30HA							60	93	131.8	24.5															48.1	105	1.846	1.712	1.712	1.03	
RGL35CA	48	6.5	18	70	50	10	50	79	124	22.5	10	12	M8x12	12	9	12.6	34	30.2	14	12	9	40	20	M8x25	57.9	105.2	2.17	1.44	1.44	1.27	6.06
RGL35HA							72	106.5	151.5	25.25															73.1	142	2.93	2.6	2.6	1.65	
RGL45CA	60	8	20.5	86	60	13	60	106	153.2	31	10	12.9	M10x17	16	10	14	45	38	20	17	14	52.5	22.5	M12x35	92.6	178.8	4.52	3.05	3.05	2.47	9.97
RGL45HA							80	139.8	187	37.9															116	230.9	6.33	5.47	5.47	3.20	
RGL55CA	70	10	23.5	100	75	12.5	75	125.5	183.7	37.75	12.5	12.9	M12x18	17.5	12	17.5	53	44	23	20	16	60	30	M14x45	130.5	252	8.01	5.4	5.4	3.91	13.98
RGL55HA							95	173.8	232	51.9															167.8	348	11.15	10.25	10.25	5.32	

Note : 1. 1 kgf = 9.81 N
2. The theoretical dynamic rated load is C_{100R}, if necessary C_{50R} conversion formula is as follows : $C_{50R} = 1.23 \times C_{100R}$

(3) RGW-CC / RGW-HC

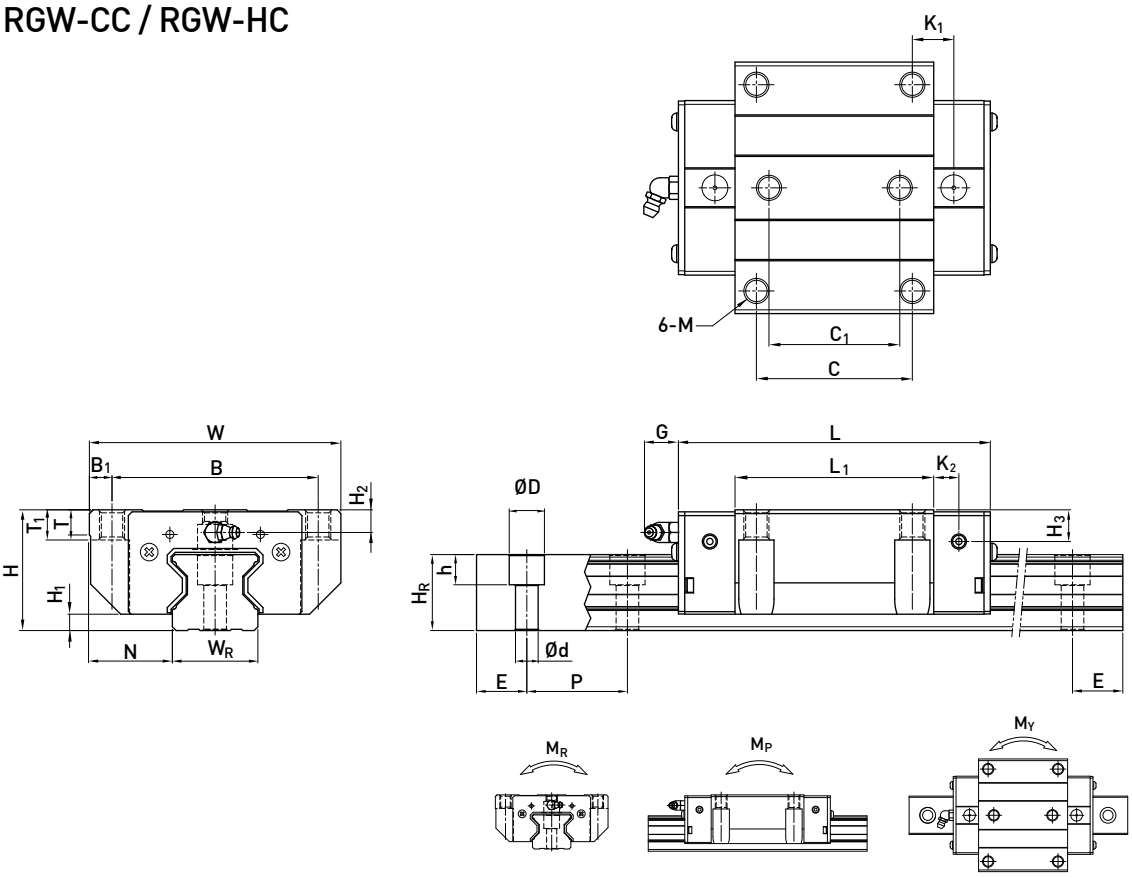

Model No.	Dimensions of Assembly (mm)			Dimensions of Block (mm)															Dimensions of Rail (mm)							Mounting Bolt for Rail	Basic Dynamic Load Rating	Basic Static Load Rating	Static Rated Moment			Weight	
	H	H_1	N	W	B	B_1	C	C_1	L_1	L	K_1	K_2	G	M	T	T_1	H_2	H_3	W_R	H_R	D	h	d	P	E	(mm)	C(kN)	C_0 (kN)	M_R kN-m	M_P kN-m	M_Y kN-m	Block kg	Rail kg/m
RGW15CC	24	4	16	47	38	4.5	30	26	45	68	11.4	4.7	5.3	M5	6	6.95	3.6	6.1	15	16.5	7.5	5.7	4.5	30	20	M4x16	11.3	24	0.311	0.173	0.173	0.22	1.8
RGW20CC	30	5	21.5	63	53	5	40	35	57.5	86	13.8	6	5.3	M6	8	10	4.3	4.3	20	21	9.5	8.5	6	30	20	M5x20	21.3	46.7	0.647	0.46	0.46	0.47	2.76
RGW20HC									77.5	106	23.8																26.9	63	0.872	0.837	0.837	0.63	
RGW25CC	36	5.5	23.5	70	57	6.5	45	40	64.5	97.9	15.75	7.25	12	M8	9.5	10	6.2	6	23	23.6	11	9	7	30	20	M6x20	27.7	57.1	0.758	0.605	0.605	0.72	3.08
RGW25HC									81	114.4	24																33.9	73.4	0.975	0.991	0.991	0.91	
RGW30CC	42	6	31	90	72	9	52	44	71	109.8	17.5	8	12	M10	9.5	10	6.5	7.3	28	28	14	12	9	40	20	M8x25	39.1	82.1	1.445	1.06	1.06	1.16	4.41
RGW30HC									93	131.8	28.5																48.1	105	1.846	1.712	1.712	1.52	
RGW35CC	48	6.5	33	100	82	9	62	52	79	124	16.5	10	12	M10	12	13	9	12.6	34	30.2	14	12	9	40	20	M8x25	57.9	105.2	2.17	1.44	1.44	1.75	6.06
RGW35HC									106.5	151.5	30.25																73.1	142	2.93	2.6	2.6	2.40	
RGW45CC	60	8	37.5	120	100	10	80	60	106	153.2	21	10	12.9	M12	14	15	10	14	45	38	20	17	14	52.5	22.5	M12x35	92.6	178.8	4.52	3.05	3.05	3.43	9.97
RGW45HC									139.8	187	37.9																116	230.9	6.33	5.47	5.47	4.57	
RGW55CC	70	10	43.5	140	116	12	95	70	125.5	183.7	27.75	12.5	12.9	M14	16	17	12	17.5	53	44	23	20	16	60	30	M14x45	130.5	252	8.01	5.4	5.4	5.43	13.98
RGW55HC									173.8	232	51.9																167.8	348	11.15	10.25	10.25	7.61	
RGW 65CC	90	12	53.5	170	142	14	110	82	160	232	40.8	15.8	12.9	M16	22	23	15	15	63	53	26	22	18	75	35	M16x50	213	411.6	16.20	11.59	11.59	11.63	20.22
RGW 65HC									223	295	72.3																275.3	572.7	22.55	22.17	22.17	16.58	

Note : 1. 1 kgf = 9.81 N
2. The theoretical dynamic rated load is C_{100R}, if necessary C_{50R} conversion formula is as follows : $C_{50R} = 1.23 \times C_{100R}$

RG Series

High Rigidity Roller Type

(4) RGS-CA/RGS-HA

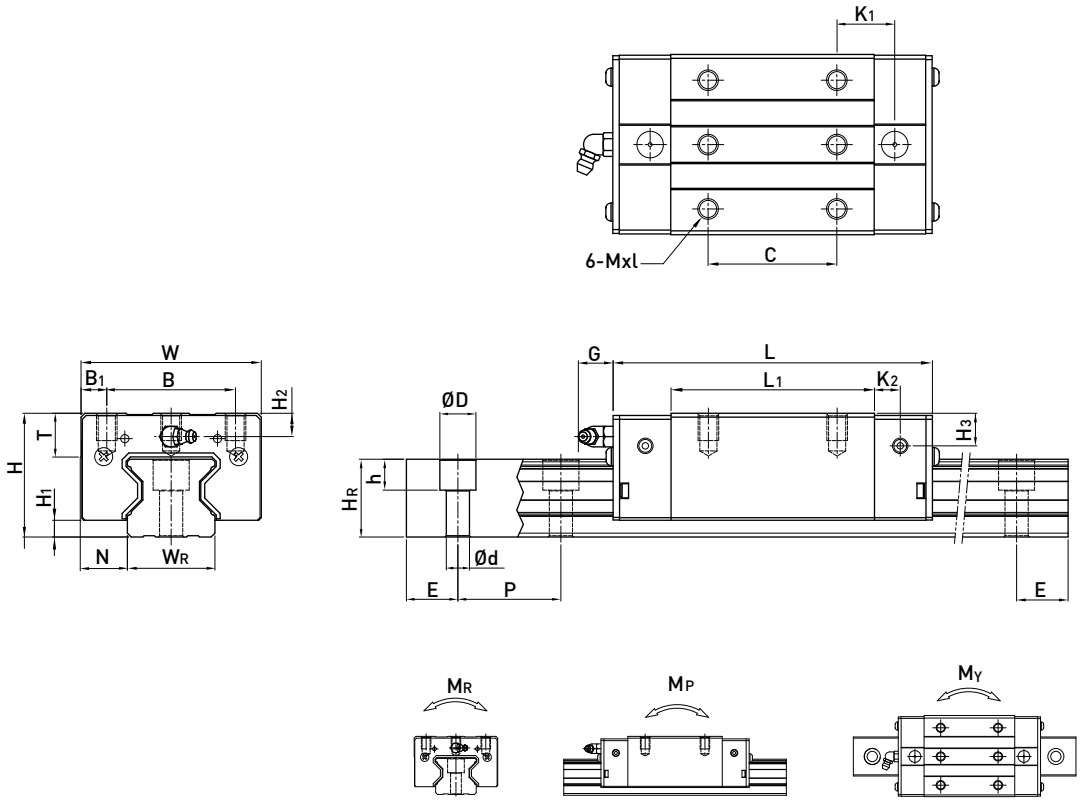

Model No.	Dimensions of Assembly (mm)			Dimensions of Block (mm)													Dimensions of Rail (mm)							Mounting Bolt for Rail	Basic Dynamic Load Rating	Basic Static Load Rating	Static Rated Moment			Weight	
	H	H_1	N	W	B	B_1	C	L_1	L	K_1	K_2	G	Mxl	T	H_2	H_3	W_R	H_R	D	h	d	P	E	(mm)	C(kN)	C_0 (kN)	M_R kN-m	M_P kN-m	M_Y kN-m	Block kg	Rail kg/m
RGS35CA	44	6.5	18	70	50	10	50	79	124	22.5	10	12	M8x9	12	6.5	7.8	34	30.2	14	12	9	40	20	M8x25	57.9	105.2	2.17	1.44	1.44	1.12	6.06
RGS35HA							72	106.5	151.5	25.25															73.1	142	2.93	2.6	2.6	1.45	
RGS45CA	52	8	20.5	86	60	13	60	106	153.2	31	10	12.9	M10x11	16	7	7	45	38	20	17	14	52.5	22.5	M12x35	92.6	178.8	4.52	3.05	3.05	1.96	9.97
RGS45HA							80	139.8	187	37.9															116	230.9	6.33	5.47	5.47	2.5	

Note : 1. 1 kgf = 9.81 N
2. The theoretical dynamic rated load is C_{100R}, if necessary C_{50R} conversion formula is as follows : $C_{50R} = 1.23 \times C_{100R}$

(5) RGF-CC/RGF-HC

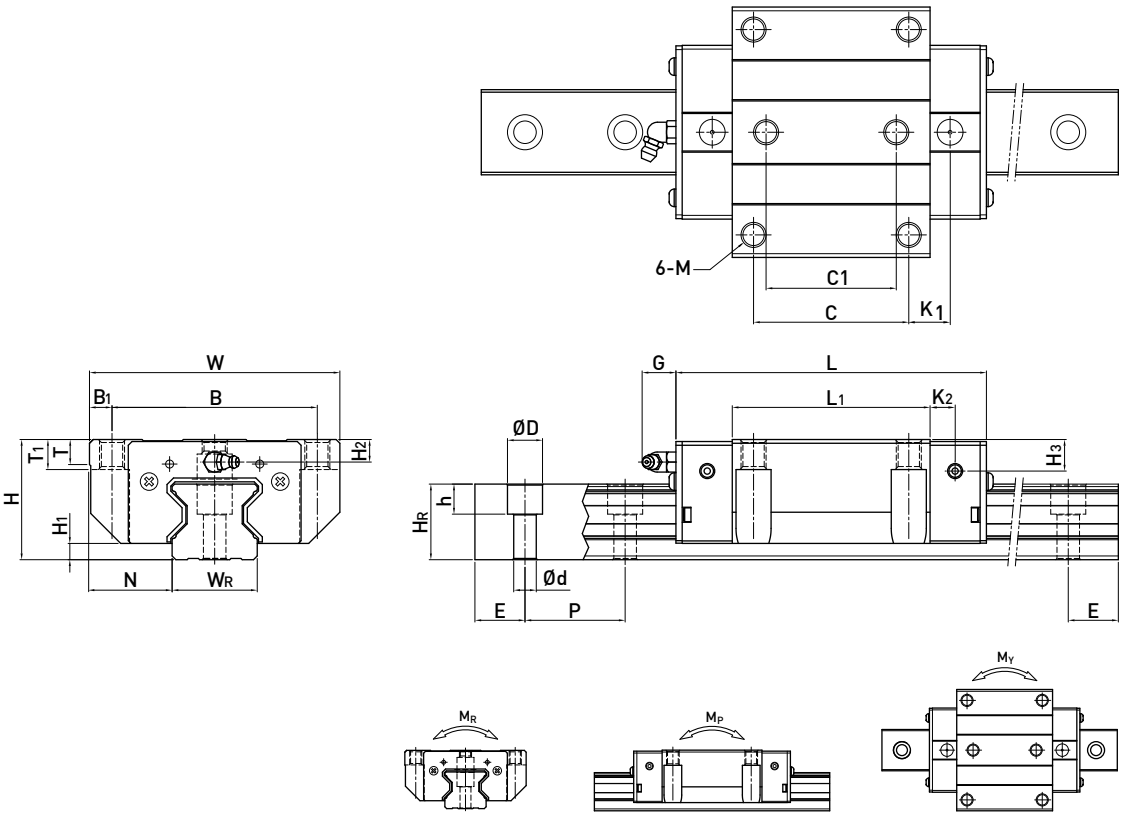

Model No.	Dimensions of Assembly (mm)			Dimensions of Block (mm)															Dimensions of Rail (mm)							Mounting Bolt for Rail	Basic Dynamic Load Rating	Basic Static Load Rating	Static Rated Moment			Weight	
	H	H_1	N	W	B	B_1	C	C_1	L_1	L	K_1	K_2	G	M	T	T_1	H_2	H_3	W_R	H_R	D	h	d	P	E	(mm)	C(kN)	C_0 (kN)	M_R kN-m	M_P kN-m	M_Y kN-m	Block kg	Rail kg/m
RGF35CC	44	6.5	33	100	82	9	62	52	79	124	16.5	10	12	M10	12	13	6.5	7.8	34	30.2	14	12	9	40	20	M8x25	57.9	105.2	2.17	1.44	1.44	1.52	6.06
RGF35HC									106.5	151.5	30.25																73.1	142	2.93	2.6	2.6	2.08	
RGF45CC	52	8	37.5	120	100	10	80	60	106	153.2	21	10	12.9	M12	14	15	7	7	45	38	20	17	14	52.5	22.5	M12x35	92.6	178.8	4.52	3.05	3.05	2.67	9.97
RGF45HC									139.8	187	37.9																116	230.9	6.33	5.47	5.47	3.56	

Note : 1. 1 kgf = 9.81 N
2. The theoretical dynamic rated load is C_{100R}, if necessary C_{50R} conversion formula is as follows : $C_{50R} = 1.23 \times C_{100R}$

RG Series

High Rigidity Roller Type

(6) Dimensions for RGR-T (Rail Mounting from Bottom)

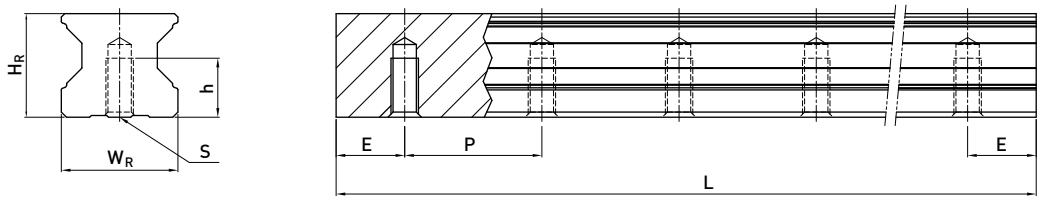

Model No.	Dimensions of Rail (mm)						Weight
	W_R	H_R	S	h	P	E	(kg/m)
RGR15T	15	16.5	M5×0.8P	8	30	20	1.86
RGR20T	20	21	M6×1P	10	30	20	2.76
RGR25T	23	23.6	M6×1P	12	30	20	3.36
RGR30T	28	28	M8×1.25P	15	40	20	4.82
RGR35T	34	30.2	M8×1.25P	17	40	20	6.48
RGR45T	45	38	M12×1.75P	24	52.5	22.5	10.83
RGR55T	53	44	M14×2P	24	60	30	15.15
RGR65T	63	53	M20×2.5P	30	75	35	21.24

2-10 CRG Series - High Rigidity Roller Type Linear Guideway with Cover Strip

2-10-1 Advantages and features

CRG series linear guideways are a : cover-strip type, featuring high rigidity for high loads. It also has four-way load characteristics.This specification can be matched with the latest slide dustproof accessories.

(1) Super high rigidity
The CRG series is a type of linear guideway that uses rollers as the rolling elements. Rollers have a greater contact area than balls so that the roller guideway features higher load capacity and greater rigidity. The figure shows the rigidity of a roller and a ball with equal volume.

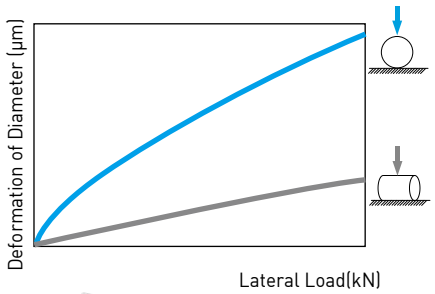

(2) Operating life increased
Compare with the ball element, the contact pressure of rolling element is distributed on the line region. Therefore,
stress concentration was reduced siginificantly and the CRG series offers longer running life.

(3) Latest dustproof accessory for rail
The CRG series offers a special stainless cover strip.

Cover strip

2-10-2 Construction of CRG Series

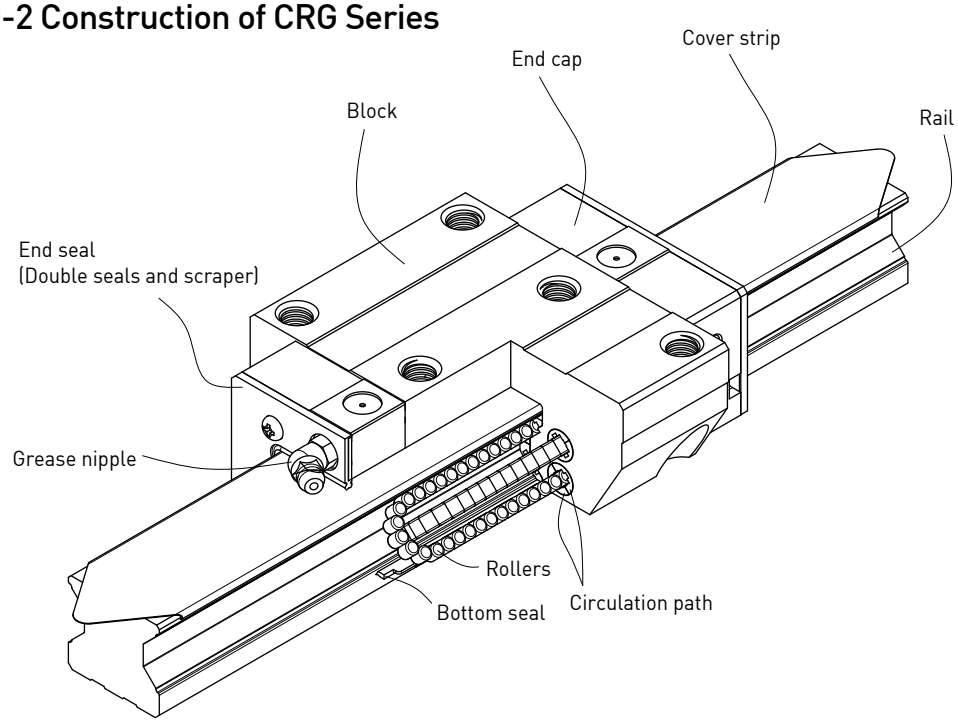

- Rolling circulation system: Block, Rail, End cap, Circulation path, Rollers
- Lubrication system: Grease nipple and piping joint
- Dust protection system: End seal, Bottom seal, without CAP, Cover Strip, Double seals and Scraper

CRG Series

High Rigidity Roller Type with Cover Strip

2-10-3 Model Number of CRG series

CRG series linear guideways are classified into non-interchangeable and interchangeable types. The sizes of these two types are the same as one another. The main difference is that the interchangeable type of blocks and rails can be freely exchanged and they can maintain P-class accuracy. Because of strict dimensional control, the interchangeable type linear guideways are a wise choice for customers when rails do not need to be matched for an axis. The model number of the CRG series identifies the size, type, accuracy class, preload class, etc.

(1) Non-interchangeable type

CRG W 35 C C E 2 R 1640 E ZA P II + KK+CS

- CRG Series
- Block Type
  W : Flange Type
  H : Square Type
  L : Square Type (Low)[3]
- Model size
  15,20,25, 30, 35, 45, 55, 65
- Load Type
  C : Heavy Load
  H : Super Heavy Load
- Block Mounting
  A : Mounting From Top
  C : Top or Bottom
- E: Special Block
  None: Standard Block
- No. of Blocks per Rail
- Rail Mounting Type
  R : Mounting From Top
- Rail Length (mm)
- E: Special Rail
  None: Standard Rail
- Preload Code: Z0, ZA, ZB
- Precision Code: H, P, SP, UP
- No. of Rails per matched set [1]
- Dust Protection[2]
- Cover Strip

Note: 1. The roman numerals express a matched set of rails.
2. No symbol indicates standard protection (end seal and bottom seal).
ZZ : End seal, bottom seal and scraper
KK: Double seals, bottom seal and scraper.
DD: Double seals and bottom seal
3. Block type CRGL is the low profile design of CRGH (square type), the assembled height is same as CRGW (flange type) in same size.

(2) Interchangeable type

- Model Number of CRG Block

CRG W 25 C A E ZA P + KK+CS

- CRG Series
- Block Type
  W : Flange Type H : Square Type
  L : Square Type (Low)[3]
- Model size
  15,20,25, 30, 35, 45, 55, 65
- Load Type
  C : Heavy Load H : Super Heavy Load
- Block Mounting Type
  A : Mounting From Top
  C : Top or Bottom
- E: Special Block
  None: Standard block
- Preload Code : Z0, ZA
- Precision Code : H, P
- Dust Protection[2]
- Cover Strip

- Model Number of CRG Rail

CRG R 25 R 1240 E P + CS

- CRG Series
- Interchangeable Rail
- Model size
  15,20,25, 30, 35, 45, 55, 65
- Rail Mounting Type
  R : Mounting From Top
- Rail Length (mm)
- E: Special Rail,
  None: Standard Rail
- Precision Code : H, P
- Cover Strip

- **Model Number of CRG Rail**

CRG R 25 R 1200 E P *

CRG Series

Interchangeable Rail

Model size :
15, 20, 25, 30, 35, 45, 55, 65

Rail Mounting Type
R : Mounting From Top

Precision Code : H, P

E: Special Rail,
None: Standard Rail

Rail Length (mm)

*Without cap and cover strip.

2-10-4 Types

(1) Block types

HIWIN offers two types of guide blocks, flange and square type. Because of the low assembly height and large mounting surface, the flange type is excellent for heavy moment load applications.

Table 2-10-1 **Block Types**

Type	Model	Shape	Height (mm)	Rail Length (mm)	Main Applications
Square	CRGH-CA CRGH-HA	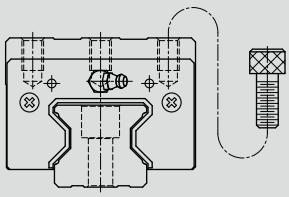	28 ↓ 90	100 ↓ 4000	○ Automation Systems ○ Transportation equipment ○ CNC machining centers ○ Heavy duty cutting machines ○ CNC grinding machines ○ Injection molding machines ○ Plano millers ○ Devices requiring high rigidity ○ Devices requiring high load capacity ○ Electric discharge machines
Square (low)	CRGL-CA CRGL-HA	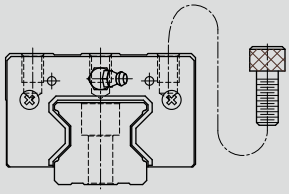	24 ↓ 70	100 ↓ 4000	
Flange	CRGW-CC CRGW-HC	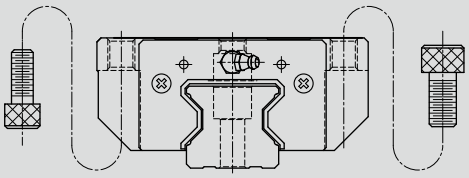	24 ↓ 90	100 ↓ 4000	

(2) Rail types

Table 2-10-2 **Rail Types**

Mounting from Top
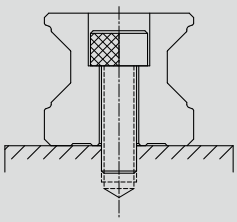

CRG Series

High Rigidity Roller Type with Cover Strip

2-10-5 Accuracy Classes

The accuracy of the CRG series can be classified into four classes: high (H), precision (P), super precision (SP) and ultra precision (UP). Customers may choose the class by referencing the accuracy requirements of the applied equipment.

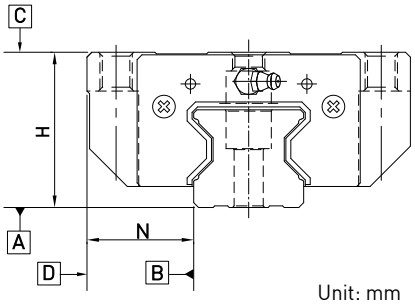

(1) Accuracy of non-interchangeable

Table 2-10-3 **Accuracy Standards** Unit: mm

Item	CRG - 15, 20			
Accuracy Classes	High (H)	Precision (P)	Super Precision (SP)	Ultra Precision (UP)
Dimensional tolerance of height H	± 0.03	0 - 0.03	0 - 0.015	0 - 0.008
Dimensional tolerance of width N	± 0.03	0 - 0.03	0 - 0.015	0 - 0.008
Variation of height H	0.01	0.006	0.004	0.003
Variation of width N	0.01	0.006	0.004	0.003
Running parallelism of block surface C to surface A	See Table 2-10-11			
Running parallelism of block surface D to surface B	See Table 2-10-11			

Table 2-10-4 **Accuracy Standards** Unit: mm

Item	CRG - 25, 30, 35			
Accuracy Classes	High (H)	Precision (P)	Super Precision (SP)	Ultra Precision (UP)
Dimensional tolerance of height H	± 0.04	0 - 0.04	0 - 0.02	0 - 0.01
Dimensional tolerance of width N	± 0.04	0 - 0.04	0 - 0.02	0 - 0.01
Variation of height H	0.015	0.007	0.005	0.003
Variation of width N	0.015	0.007	0.005	0.003
Running parallelism of block surface C to surface A	See Table 2-10-11			
Running parallelism of block surface D to surface B	See Table 2-10-11			

Table 2-10-5 **Accuracy Standards** Unit: mm

Item	CRG - 45, 55			
Accuracy Classes	High (H)	Precision (P)	Super Precision (SP)	Ultra Precision (UP)
Dimensional tolerance of height H	± 0.05	0 - 0.05	0 - 0.03	0 - 0.02
Dimensional tolerance of width N	± 0.05	0 - 0.05	0 - 0.03	0 - 0.02
Variation of height H	0.015	0.007	0.005	0.003
Variation of width N	0.02	0.01	0.007	0.005
Running parallelism of block surface C to surface A	See Table 2-10-11			
Running parallelism of block surface D to surface B	See Table 2-10-11			

Table 2-10-6 **Accuracy Standards**

Unit: mm

Item	CRG - 65			
Accuracy Classes	High (H)	Precision (P)	Super Precision (SP)	Ultra Precision (UP)
Dimensional tolerance of height H	± 0.07	0 - 0.07	0 - 0.05	0 - 0.03
Dimensional tolerance of width N	± 0.07	0 - 0.07	0 - 0.05	0 - 0.03
Variation of height H	0.02	0.01	0.007	0.005
Variation of width N	0.025	0.015	0.01	0.007
Running parallelism of block surface C to surface A	See Table 2-10-11			
Running parallelism of block surface D to surface B	See Table 2-10-11			

(2) Accuracy of interchangeable

Table 2-10-7 **Accuracy Standards**

Unit: mm

Item	CRG - 15, 20	
Accuracy Classes	High (H)	Precision (P)
Dimensional tolerance of height H	± 0.03	± 0.015
Dimensional tolerance of width N	± 0.03	± 0.015
Variation of height H	0.01	0.006
Variation of width N	0.01	0.006
Running parallelism of block surface C to surface A	See Table 2-10-11	
Running parallelism of block surface D to surface B	See Table 2-10-11	

Table 2-10-8 **Accuracy Standards**

Unit: mm

Item	CRG - 25, 30, 35	
Accuracy Classes	High (H)	Precision (P)
Dimensional tolerance of height H	± 0.04	± 0.02
Dimensional tolerance of width N	± 0.04	± 0.02
Variation of height H	0.015	0.007
Variation of width N	0.015	0.007
Running parallelism of block surface C to surface A	See Table 2-10-11	
Running parallelism of block surface D to surface B	See Table 2-10-11	

Table 2-10-9 **Accuracy Standards**

Unit: mm

Item	CRG - 45, 55	
Accuracy Classes	High (H)	Precision (P)
Dimensional tolerance of height H	± 0.05	± 0.025
Dimensional tolerance of width N	± 0.05	± 0.025
Variation of height H	0.015	0.007
Variation of width N	0.02	0.01
Running parallelism of block surface C to surface A	See Table 2-10-11	
Running parallelism of block surface D to surface B	See Table 2-10-11	

CRG Series

High Rigidity Roller Type with Cover Strip

Table 2-10-10 **Accuracy Standards**

Unit: mm

Item	CRG - 65	
Accuracy Classes	High (H)	Precision (P)
Dimensional tolerance of height H	± 0.07	± 0.035
Dimensional tolerance of width N	± 0.07	± 0.035
Variation of height H	0.02	0.01
Variation of width N	0.025	0.015
Running parallelism of block surface C to surface A	See Table 2-10-11	
Running parallelism of block surface D to surface B	See Table 2-10-11	

(3) Accuracy of running parallelism

Table 2-10-11 **Accuracy of Running Parallelism**

Rail Length (mm)	Accuracy (μm) H	P	SP	UP
~ 100	7	3	2	2
100 ~ 200	9	4	2	2
200 ~ 300	10	5	3	2
300 ~ 500	12	6	3	2
500 ~ 700	13	7	4	2
700 ~ 900	15	8	5	3
900 ~ 1,100	16	9	6	3
1,100 ~ 1,500	18	11	7	4
1,500 ~ 1,900	20	13	8	4
1,900 ~ 2,500	22	15	10	5
2,500 ~ 3,100	25	18	11	6
3,100 ~ 3,600	27	20	14	7
3,600 ~ 4,000	28	21	15	7

2-10-6 Preload

A preload can be applied to each guideway using oversized rollers. Generally, a linear motion guideway has negative clearance between the raceway and rollers to improve stiffness and maintain high precision. The CRG series linear guideway offers three standard preloads for various applications and conditions.

Table 2-10-12

Class	Code	Preload	Condition
Light Preload	Z0	0.02C~ 0.04C	Certain load direction, low impact, low precision required
Medium Preload	ZA	0.07C~0.09C	High rigidity required, high precision required
Heavy Preload	ZB	0.12C~ 0.14C	Super high rigidity required, with vibration and impact

The figure shows the relationship between the rigidity, friction and nominal life. A preload no larger than ZA would be recommended for smaller model sizes to avoid over-preload affecting the life of the guideway.

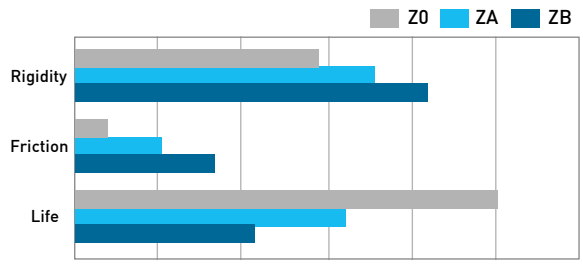

2-10-7 Dust Proof Accessories

(1) Codes of accessories

Table 2-10-13

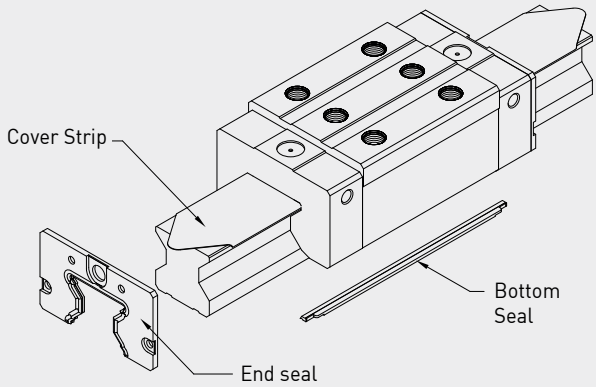

SS+CS (End seal + Bottom Seal+Cover Strip)

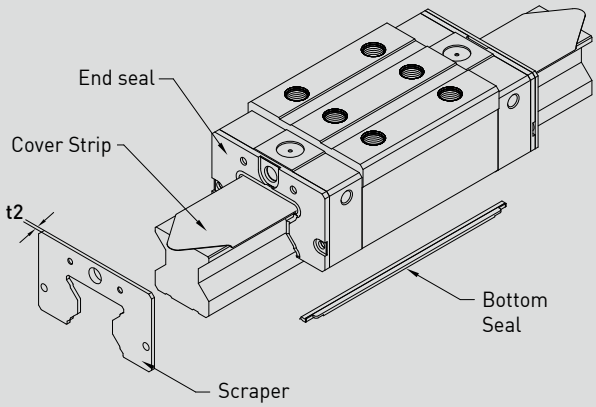

ZZ+CS (End seal+Scraper+ Bottom Seal+Cover Strip)

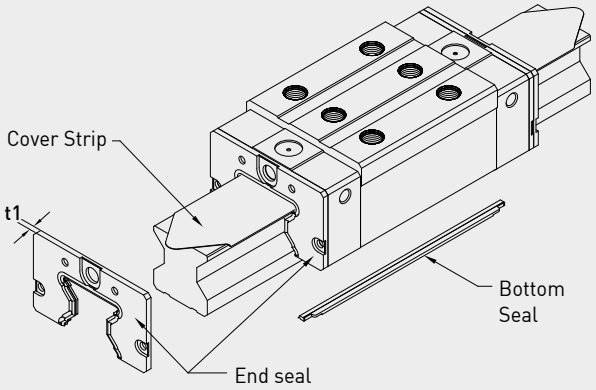

DD+CS (Double seals + Bottom Seal+Cover Strip)

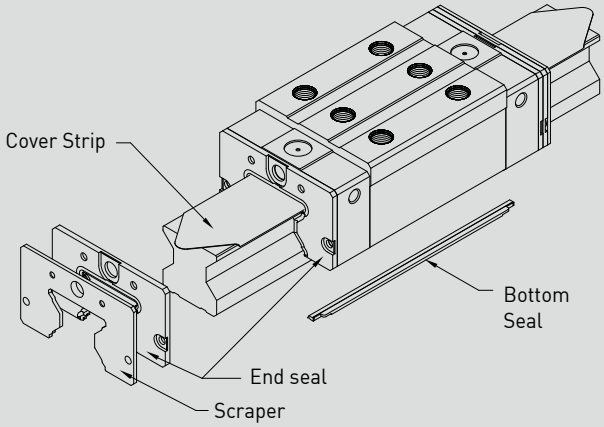

KK+CS (Double seals+Scraper+ Bottom Seal+Cover Strip)

(2) End seal and bottom seal

To prevent life reduction caused by iron chips or dust entering the block.

(3) Double seals

Enhances the wiping effect, foreign matter can be completely wiped off.

Table 2-10-14 **Dimensions of end seal**

Size	Thickness (t1) (mm)	Size	Thickness (t1) (mm)
CRG15 ES	2.2	CRG35 ES	2.5
CRG20 ES	2.2	CRG45 ES	3.6
CRG25 ES	2.2	CRG55 ES	3.6
CRG30 ES	2.4	CRG65 ES	4.4

CRG Series

High Rigidity Roller Type with Cover Strip

(4) Scraper

The scraper removes high-temperature iron chips and larger foreign objects.

Table 2-10-15 **Dimensions of scraper**

Size	Thickness (t2) (mm)	Size	Thickness (t2) (mm)
CRG15 SC	1.0	CRG35 SC	1.5
CRG20 SC	1.0	CRG45 SC	1.5
CRG25 SC	1.0	CRG55 SC	1.5
CRG30 SC	1.5	CRG65 SC	1.5

(5) Dimensions of block equipped with the dustproof parts

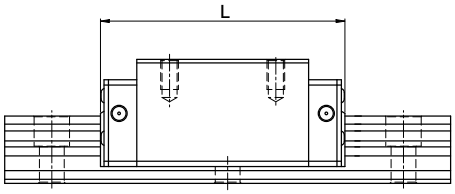

Table 2-10-16 **Overall block length**

unit: mm

Size	Overall block length (L)			
	SS	ZZ	DD	KK
CRG15C	68.0 (70.0)	70.0 (74.4)	72.4 (74.4)	74.4 (78.8)
CRG20C	86.0 (88.0)	88.0 (92.4)	90.4 (92.4)	92.4 (96.8)
CRG20H	106.0 (108.0)	108.0 (112.4)	110.4 (112.4)	112.4 (116.8)
CRG25C	97.9 (101.5)	99.9 (105.9)	102.3 (105.9)	104.3 (110.3)
CRG25H	114.4 (118)	116.4 (122.4)	118.8 (122.4)	120.8 (126.8)
CRG30C	109.8 (113.4)	112.8 (118.8)	114.6 (118.2)	117.6 (123.6)
CRG30H	131.8 (135.4)	134.8 (140.8)	136.6 (140.2)	139.6 (145.6)
CRG35C	124.0 (129.4)	127.0 (135.0)	129.0 (134.4)	132.0 (140.0)
CRG35H	151.5 (156.9)	154.5 (162.5)	156.5 (161.9)	159.5 (167.5)
CRG45C	153.2 (156.4)	156.2 (164.2)	160.4 (163.6)	163.4 (171.4)
CRG45H	187.0 (190.2)	190.0 (198.0)	194.2 (197.4)	197.2 (205.2)
CRG55C	183.7 (186.9)	186.7 (194.7)	190.9 (194.1)	193.9 (201.9)
CRG55H	232.0 (235.2)	235.0 (243.0)	239.2 (242.4)	242.2 (250.2)
CRG65C	232.0 (236.0)	235.0 (245.0)	240.8 (244.8)	243.8 (253.8)
CRG65H	295.0 (299.0)	298.0 (308.0)	303.8 (307.8)	306.8 (316.8)

Note : The marking of "( )" denotes the maximum block length with screws, lips of end seals, etc.

2-10-8 Friction

The maximum value of resistance per end seal are as shown in the table.

Table 2-10-17 **Seal Resistance**

Size	Resistance N (kgf)	Size	Resistance N (kgf)
CRG15	1.96 (0.2)	CRG35	3.53 (0.36)
CRG20	2.45 (0.25)	CRG45	4.21 (0.43)
CRG25	2.74 (0.28)	CRG55	5.09 (0.52)
CRG30	3.31 (0.31)	CRG65	6.66 (0.68)

2-10-9 The Accuracy Tolerance of Mounting Surface

(1) The accuracy tolerance of rail-mounting surface

As long as the accuracy requirements of the mounting surfaces shown in the following tables are met, the high accuracy, high rigidity and long life of the CRG series linear guideway will be maintained without any difficulty.

- **The parallelism tolerance of reference surface (P)**

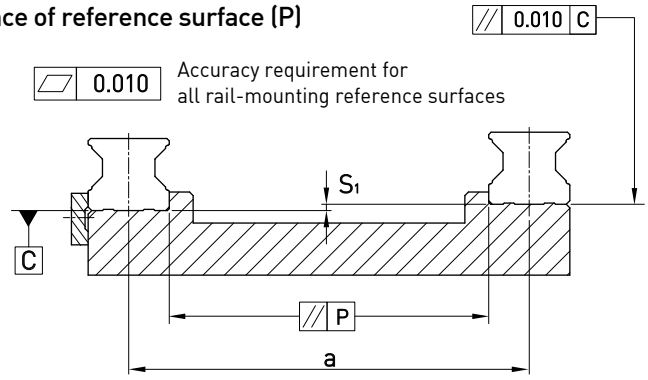

Table 2-10-18 **Max. Parallelism Tolerance (P)**

unit: μm

Size	Preload classes		
	Light Preload (Z0)	Medium Preload (ZA)	Heavy Preload (ZB)
CRG15	5	3	3
CRG20	8	6	4
CRG25	9	7	5
CRG30	11	8	6
CRG35	14	10	7
CRG45	17	13	9
CRG55	21	14	11
CRG65	27	18	14

- **The accuracy tolerance of reference surface height (S_1)**

$$S_1 = a \times K$$

S_1 : Max. tolerance of height
a : Distance between paired rails
K : Coefficient of tolerance of height

Table 2-10-19 **Coefficient of tolerance of height**

Size	Preload classes		
	Light Preload (Z0)	Medium Preload (ZA)	Heavy Preload (ZB)
K	2.2×10^{-4}	1.7×10^{-4}	1.2×10^{-4}

CRG Series

High Rigidity Roller Type with Cover Strip

(2) The accuracy tolerance of block-mounting surface

- The tolerance of the height of reference surface when two or more pieces are used in parallel (S_2)

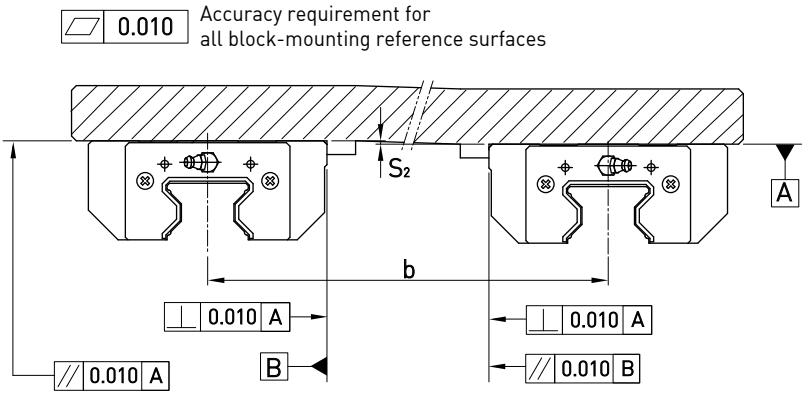

$$S_2 = b \times 4.2 \times 10^{-5}$$

S_2 : Max. tolerance of height
b : Distance between paired blocks

- The tolerance of the height of reference surface when two or more pieces are used in parallel (S_3)

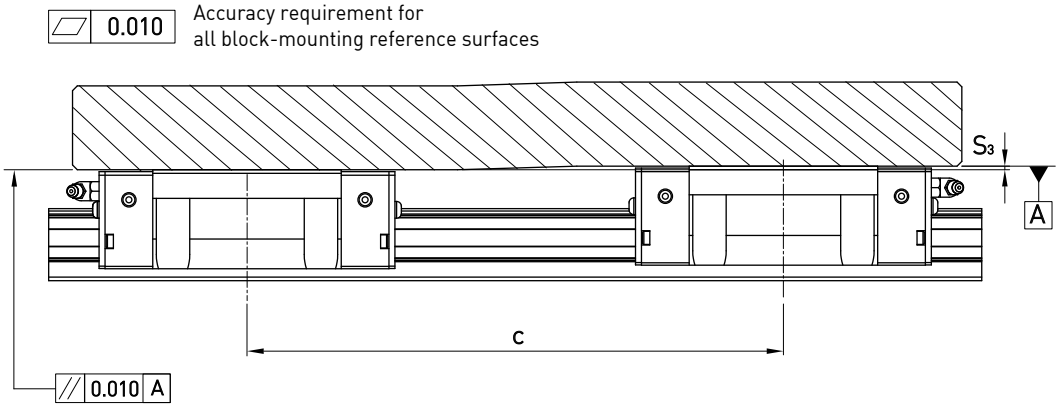

$$S_3 = c \times 4.2 \times 10^{-5}$$

S_3 : Max. tolerance of height
c : Distance between paired blocks

2-10-10 Cautions for Installation

(1) Shoulder heights and fillets

Improper shoulder heights and fillets of mounting surfaces will cause a deviation in accuracy and the interference with the rail or block. As long as the recommended shoulder heights and fillets are followed, installation inaccuracies should be eliminated.

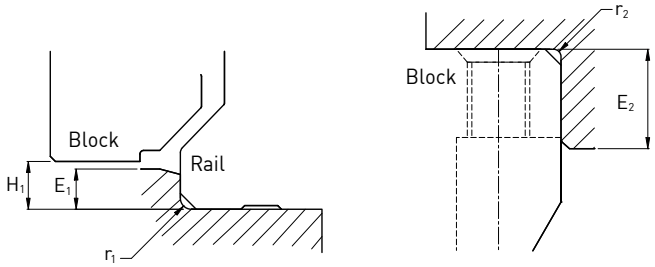

Table 2-10-20

Size	Max. radius of fillets r_1 (mm)	Max. radius of fillets r_2 (mm)	Shoulder height beside the rail E_1 (mm)	Shoulder height beside the block E_2 (mm)	Clearance under block H_1 (mm)
CRG15	0.5	0.5	3	4	4
CRG20	0.5	0.5	3.5	5	5
CRG25	1.0	1.0	5	5	5.5
CRG30	1.0	1.0	5	5	6
CRG35	1.0	1.0	6	6	6.5
CRG45	1.0	1.0	7	8	8
CRG55	1.5	1.5	9	10	10
CRG65	1.5	1.5	10	10	12

(2) Tightening Torque of Mounting Bolts

Improper tightening of mounting bolts will seriously influence the accuracy of a linear guideway. The following tightening torque for the different sizes of bolt is recommended.

Table 2-10-21

Size	Bolt size	Torque N-cm(kgf-cm)		
		Iron	Casting	Aluminum
CRG15	M4×0.7P×16L	392 (40)	274 (28)	206 (21)
CRG20	M5×0.8P×20L	883 (90)	588 (60)	441 (45)
CRG25	M6×1P×20L	1373 (140)	921 (94)	686 (70)
CRG30	M8×1.25P×25L	3041 (310)	2010 (205)	1470 (150)
CRG35	M8×1.25P×25L	3041 (310)	2010 (205)	1470 (150)
CRG45	M12×1.75P×35L	11772 (1200)	7840 (800)	5880 (600)
CRG55	M14×2P×45L	15696 (1600)	10500 (1100)	7840 (800)
CRG65	M16×2P×50L	19620 (2000)	13100 (1350)	9800 (1000)

CRG Series

High Rigidity Roller Type with Cover Strip

2-10-11 Dimensions for CRG series

(1) CRGH-CA / CRGH-HA

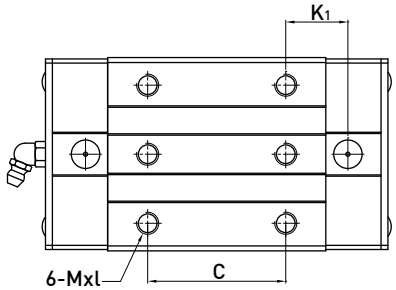

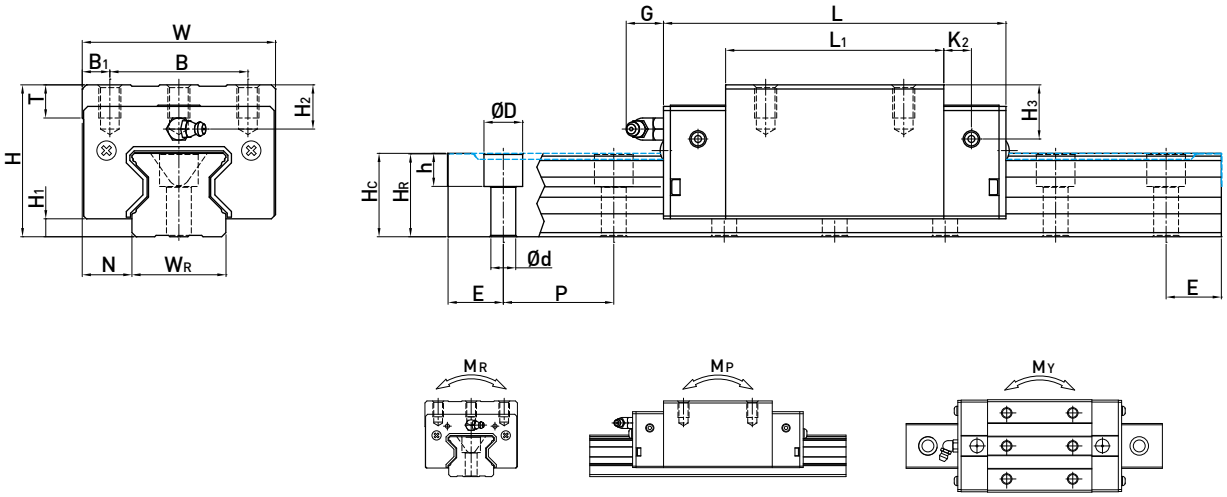

Model No.	Dimensions of Assembly (mm)			Dimensions of Block (mm)													Dimensions of Rail (mm)								Mounting Bolt for Rail	Basic Dynamic Load Rating	Basic Static Load Rating	Static Rated Moment			Weight	
	H	H_1	N	W	B	B_1	C	L_1	L	K_1	K_2	G	Mxl	T	H_2	H_3	W_R	H_R	H_C[3]	D	h	d	P	E	(mm)	C(kN)	C_0 (kN)	M_R kN-m	M_P kN-m	M_Y kN-m	Block kg	Rail kg/m
CRGH15CA	28	4	9.5	34	26	4	26	45	68	13.4	4.7	5.3	M4 x 8	6	7.6	10.1	15	16.5	16.7	7.5	5.7	4.5	30	20	M4 x16	11.3	24	0.311	0.173	0.173	0.20	1.8
CRGH20CA	34	5	12	44	32	6	36	57.5	86	15.8	6	5.3	M5 x 8	8	8.3	8.3	20	21	21.2	9.5	8.5	6	30	20	M5 x20	21.3	46.7	0.647	0.46	0.46	0.40	2.76
CRGH20HA							50	77.5	106	18.8																26.9	63	0.872	0.837	0.837	0.53	
CRGH25CA	40	5.5	12.5	48	35	6.5	35	64.5	97.9	20.75	7.25	12	M6 x 8	9.5	10.2	10	23	23.6	23.8	11	9	7	30	20	M6 x20	27.7	57.1	0.758	0.605	0.605	0.61	3.08
CRGH25HA							50	81	114.4	21.5																33.9	73.4	0.975	0.991	0.991	0.75	
CRGH30CA	45	6	16	60	40	10	40	71	109.8	23.5	8	12	M8 x10	9.5	9.5	10.3	28	28	28.2	14	12	9	40	20	M8 x25	39.1	82.1	1.445	1.06	1.06	0.90	4.41
CRGH30HA							60	93	131.8	24.5																48.1	105	1.846	1.712	1.712	1.16	
CRGH35CA	55	6.5	18	70	50	10	50	79	124	22.5	10	12	M8 x12	12	16	19.6	34	30.2	30.4	14	12	9	40	20	M8 x25	57.9	105.2	2.17	1.44	1.44	1.57	6.06
CRGH35HA							72	106.5	151.5	25.25																73.1	142	2.93	2.6	2.6	2.06	
CRGH45CA	70	8	20.5	86	60	13	60	106	153.2	31	10	12.9	M10x17	16	20	24	45	38	38.2	20	17	14	52.5	22.5	M12 x35	92.6	178.8	4.52	3.05	3.05	3.18	9.97
CRGH45HA							80	139.8	187	37.9																116	230.9	6.33	5.47	5.47	4.13	
CRGH55CA	80	10	23.5	100	75	12.5	75	125.5	183.7	37.75	12.5	12.9	M12x18	17.5	22	27.5	53	44	44.2	23	20	16	60	30	M14 x45	130.5	252	8.01	5.4	5.4	4.89	13.98
CRGH55HA							95	173.8	232	51.9																167.8	348	11.15	10.25	10.25	6.68	
CRGH65CA	90	12	31.5	126	76	25	70	160	232	60.8	15.8	12.9	M16x20	25	15	15	63	53	53.2	26	22	18	75	35	M16x50	213	411.6	16.20	11.59	11.59	8.89	20.22
CRGH65HA							120	223	295	67.3																275.3	572.7	22.55	22.17	22.17	12.13	

Note : 1. 1 kgf = 9.81 N
2. The theoretical dynamic rated load is C_{100R}, if necessary C_{50R} conversion formula is as follows : $C_{50R} = 1.23 \times C_{100R}$
3. Dimension H_C with cover strip.

(2) CRGL-CA / CRGL-HA

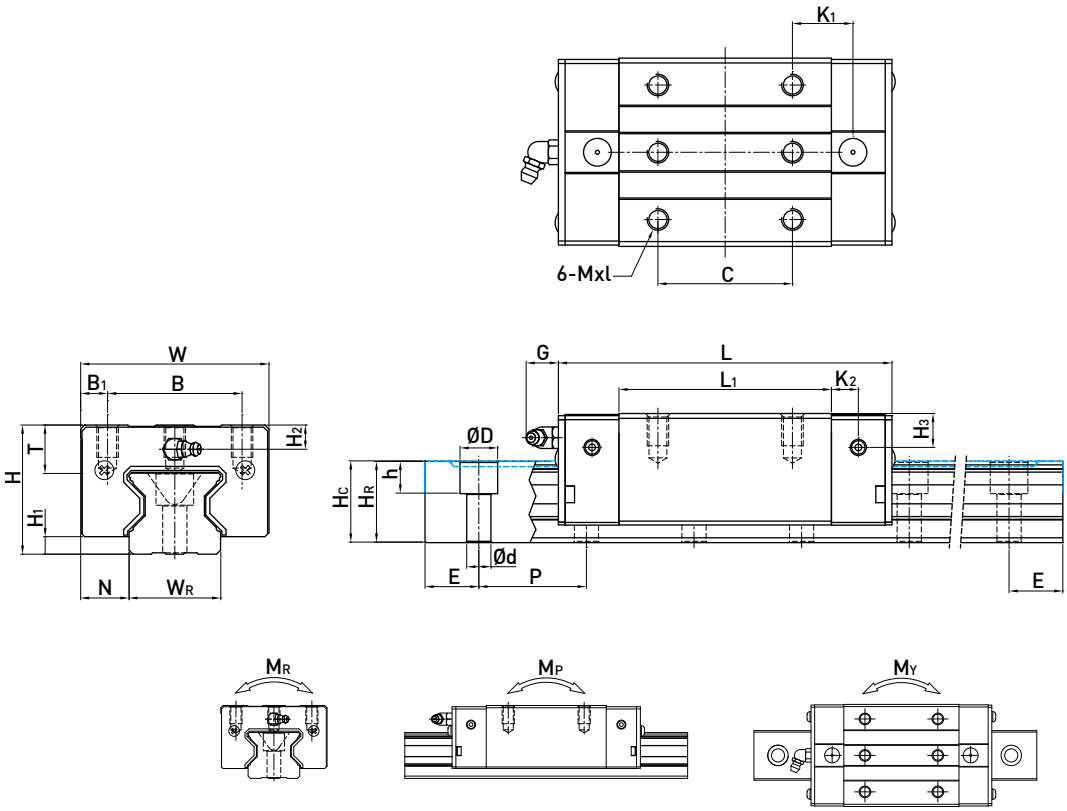

Model No.	Dimensions of Assembly (mm)			Dimensions of Block (mm)													Dimensions of Rail (mm)								Mounting Bolt for Rail	Basic Dynamic Load Rating	Basic Static Load Rating	Static Rated Moment			Weight	
	H	H_1	N	W	B	B_1	C	L_1	L	K_1	K_2	G	M	T	H_2	H_3	W_R	H_R	H_C[3]	D	h	d	P	E	(mm)	C(kN)	C_0 (kN)	M_R kN-m	M_P kN-m	M_Y kN-m	Block kg	Rail kg/m
CRGL15CA	24	4	9.5	34	26	4	26	45	68	13.4	4.7	5.3	M4x5.5	6	3.6	6.1	15	16.5	16.7	7.5	5.7	4.5	30	20	M4x16	11.3	24	0.311	0.173	0.173	0.15	1.8
CRGL20CA	30	5	12	44	32	6	36	57.5	86	15.8	6	5.3	M5x6	8	4.3	4.3	20	21	21.2	9.5	8.5	6	30	20	M5x20	21.3	46.7	0.647	0.46	0.46	0.32	2.76
CRGL20HA							50	77.5	106	18.8																26.9	63	0.872	0.837	0.837	0.42	
CRGL25CA	36	5.5	12.5	48	35	6.5	35	64.5	97.9	20.75	7.25	12	M6x8	9.5	6.2	6	23	23.6	23.8	11	9	7	30	20	M6x20	27.7	57.1	0.758	0.605	0.605	0.51	3.08
CRGL25HA							50	81	114.4	21.5																33.9	73.4	0.975	0.991	0.991	0.63	
CRGL30CA	42	6	16	60	40	10	40	71	109.8	23.5	8	12	M8x10	9.5	6.5	7.3	28	28	28.2	14	12	9	40	20	M8x25	39.1	82.1	1.445	1.06	1.06	0.80	4.41
CRGL30HA							60	93	131.8	24.5																48.1	105	1.846	1.712	1.712	1.03	
CRGL35CA	48	6.5	18	70	50	10	50	79	124	22.5	10	12	M8x12	12	9	12.6	34	30.2	30.4	14	12	9	40	20	M8x25	57.9	105.2	2.17	1.44	1.44	1.27	6.06
CRGL35HA							72	106.5	151.5	25.25																73.1	142	2.93	2.6	2.6	1.65	
CRGL45CA	60	8	20.5	86	60	13	60	106	153.2	31	10	12.9	M10x17	16	10	14	45	38	38.2	20	17	14	52.5	22.5	M12x35	92.6	178.8	4.52	3.05	3.05	2.47	9.97
CRGL45HA							80	139.8	187	37.9																116	230.9	6.33	5.47	5.47	3.20	
CRGL55CA	70	10	23.5	100	75	12.5	75	125.5	183.7	37.75	12.5	12.9	M12x18	17.5	12	17.5	53	44	44.2	23	20	16	60	30	M14x45	130.5	252	8.01	5.4	5.4	3.91	13.98
CRGL55HA							95	173.8	232	51.9																167.8	348	11.15	10.25	10.25	5.32	

Note : 1. 1 kgf = 9.81 N
2. The theoretical dynamic rated load is C_{100R}, if necessary C_{50R} conversion formula is as follows : $C_{50R} = 1.23 \times C_{100R}$
3. Dimension H_C with cover strip.

CRG Series

High Rigidity Roller Type with Cover Strip

(3) CRGW-CC / CRGW-HC

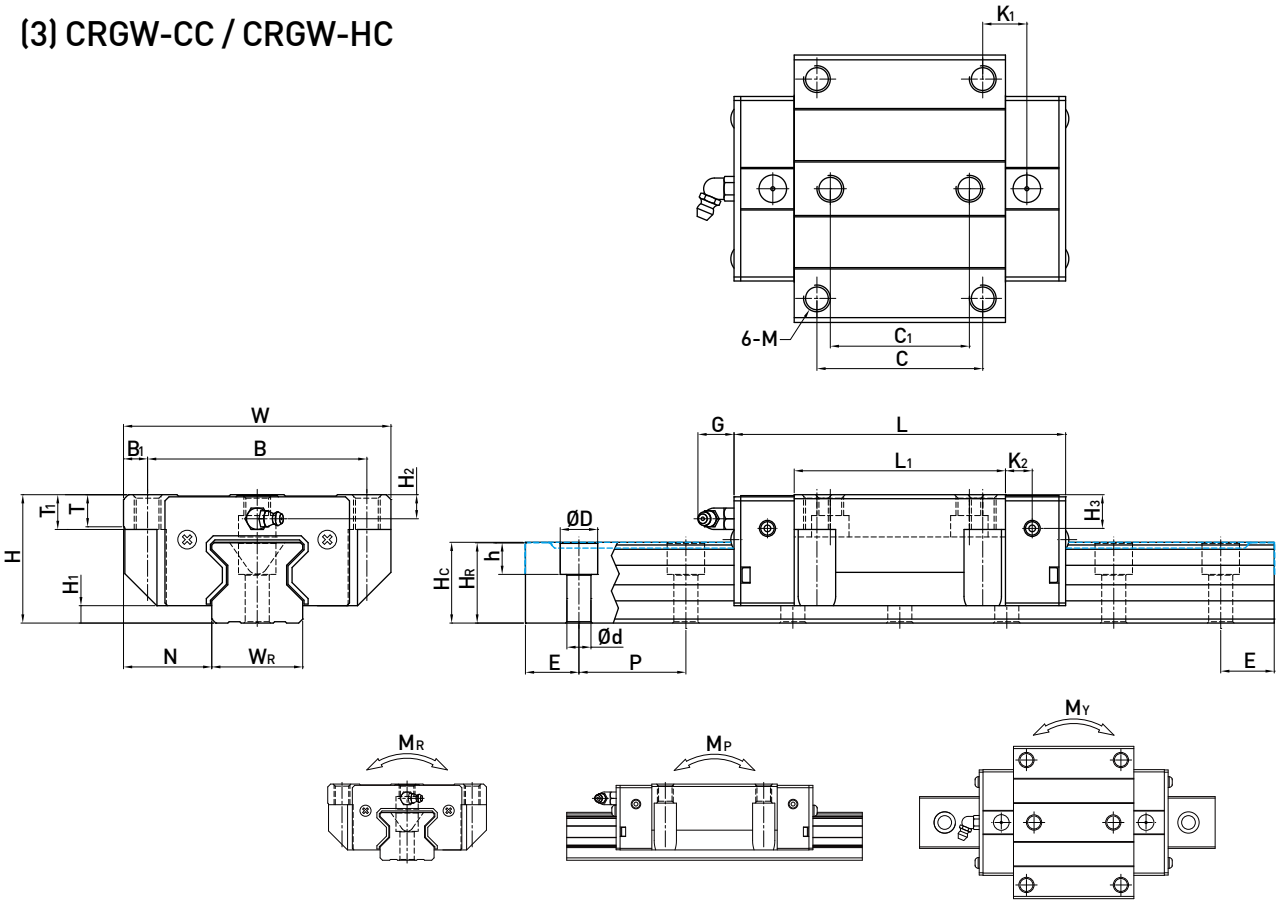

Model No.	Dimensions of Assembly (mm)			Dimensions of Block (mm)															Dimensions of Rail (mm)								Mounting Bolt for Rail	Basic Dynamic Load Rating	Basic Static Load Rating	Static Rated Moment			Weight	
	H	H_1	N	W	B	B_1	C	C_1	L_1	L	K_1	K_2	G	M	T	T_1	H_2	H_3	W_R	H_R	H_C[3]	D	h	d	P	E	(mm)	C(kN)	C_0 (kN)	M_R kN-m	M_P kN-m	M_Y kN-m	Block kg	Rail kg/m
CRGW15CC	24	4	16	47	38	4.5	30	26	45	68	11.4	4.7	5.3	M5	6	6.95	3.6	6.1	15	16.5	16.7	7.5	5.7	4.5	30	20	M4x16	11.3	24	0.311	0.173	0.173	0.22	1.8
CRGW20CC	30	5	21.5	63	53	5	40	35	57.5	86	13.8	6	5.3	M6	8	10	4.3	4.3	20	21	21.2	9.5	8.5	6	30	20	M5x20	21.3	46.7	0.647	0.46	0.46	0.47	2.76
CRGW20HC									77.5	106	23.8																	26.9	63	0.872	0.837	0.837	0.63	
CRGW25CC	36	5.5	23.5	70	57	6.5	45	40	64.5	97.9	15.75	7.25	12	M8	9.5	10	6.2	6	23	23.6	23.8	11	9	7	30	20	M6x20	27.7	57.1	0.758	0.605	0.605	0.72	3.08
CRGW25HC									81	114.4	24																	33.9	73.4	0.975	0.991	0.991	0.91	
CRGW30CC	42	6	31	90	72	9	52	44	71	109.8	17.5	8	12	M10	9.5	10	6.5	7.3	28	28	28.2	14	12	9	40	20	M8x25	39.1	82.1	1.445	1.06	1.06	1.16	4.41
CRGW30HC									93	131.8	28.5																	48.1	105	1.846	1.712	1.712	1.52	
CRGW35CC	48	6.5	33	100	82	9	62	52	79	124	16.5	10	12	M10	12	13	9	12.6	34	30.2	30.4	14	12	9	40	20	M8x25	57.9	105.2	2.17	1.44	1.44	1.75	6.06
CRGW35HC									106.5	151.5	30.25																	73.1	142	2.93	2.6	2.6	2.40	
CRGW45CC	60	8	37.5	120	100	10	80	60	106	153.2	21	10	12.9	M12	14	15	10	14	45	38	38.2	20	17	14	52.5	22.5	M12x35	92.6	178.8	4.52	3.05	3.05	3.43	9.97
CRGW45HC									139.8	187	37.9																	116	230.9	6.33	5.47	5.47	4.57	
CRGW55CC	70	10	43.5	140	116	12	95	70	125.5	183.7	27.75	12.5	12.9	M14	16	17	12	17.5	53	44	44.2	23	20	16	60	30	M14x45	130.5	252	8.01	5.4	5.4	5.43	13.98
CRGW55HC									173.8	232	51.9																	167.8	348	11.15	10.25	10.25	7.61	
CRGW65CC	90	12	53.5	170	142	14	110	82	160	232	40.8	15.8	12.9	M16	22	23	15	15	63	53	53.2	26	22	18	75	35	M16x50	213	411.6	16.20	11.59	11.59	11.63	20.22
CRGW65HC									223	295	72.3																	275.3	572.7	22.55	22.17	22.17	16.58	

Note : 1. 1 kgf = 9.81 N
2. The theoretical dynamic rated load is C_{100R}, if necessary C_{50R} conversion formula is as follows : $C_{50R} = 1.23 \times C_{100R}$
3. Dimension H_C with cover strip.

(4) Dimension of cover strip and plastic end jig

plastic end jig (standard)

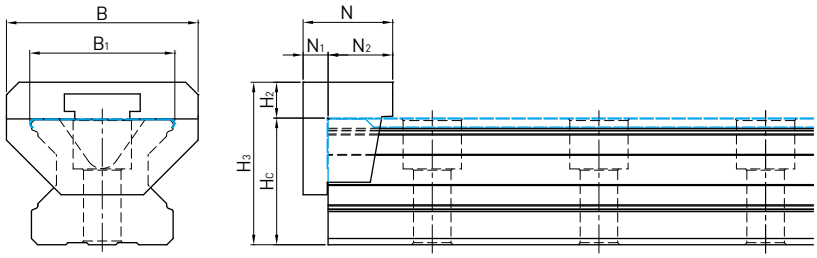

Model No.	H_3	H_c[1]	H_2	N	N_1	N_2	B	B_1
CRG15	21.2	16.7	4.5	13.0	3.7	9.3	20.0	16.0
CRG20	26.1	21.2	4.9	13.0	4	9.0	27.0	21.0
CRG25	28.9	23.8	5.1	15.0	4	11.0	31.5	24.0
CRG30	35.1	28.2	6.9	21.0	6	15.0	40.0	29.0
CRG35	39.1	30.4	8.7	21.5	6	15.5	46.0	35.0
CRG45	46.6	38.2	8.4	22.0	5.2	16.8	51.6	46.0
CRG55	54.3	44.2	10.1	22.5	7.7	14.8	62.0	54.0
CRG65	64.4	53.2	11.2	30.0	9.2	20.8	70.0	64.0

Note : 1. Dimension H_c with cover strip

Metal end jig (optional)

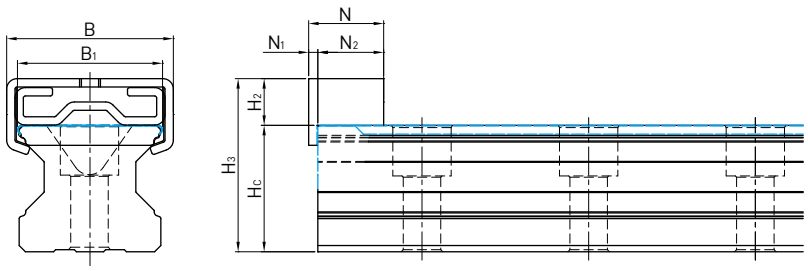

Model No.	H_3	H_c[1]	H_2	N	N_1	N_2	B	B_1
CRG15	20.5	16.7	3.8	15	2.2	12.8	21	15.8
CRG20	28.4	21.2	7.2	13	2.2	10.8	28	20.7
CRG25	33.8	23.8	10	15	2.2	12.8	30.7	23.9
CRG30	37.4	28.2	9.2	12	2.2	9.8	34	28.9
CRG35	41.6	30.4	11.2	18	2.2	15.8	40	34.8
CRG45	50.2	38.2	12	18	2.2	15.8	53.58	45.6
CRG55	55.4	44.2	11.2	18	2.2	15.8	58.6	53.7
CRG65	65.2	53.2	12	18	2.2	15.8	71.8	63.6

Note : 1. Dimension H_c with cover strip

QR Series

Roller Type

2-11 QR series - Roller Type Linear Guideway, with SynchMotion® Technology

QR series offers super high rigidity and very high load capacities. The QR series with SynchMotion® Technology offers low friction, smooth movement, quieter operation and longer running life. In the industry where high accuracy, low noise and high rigidity is required, the QR series is interchangeable with the RG series.

2-11-1 Advantages and features

(1) Super high load capacity in linear guideway, with the four rows of rollers arranged at a contact angle of 45-degrees, the QR series linear guideway has equal load ratings in the radial, reverse radial and lateral directions. The QR series has a higher load capacity in a smaller size than conventional, ball-type linear guideways.

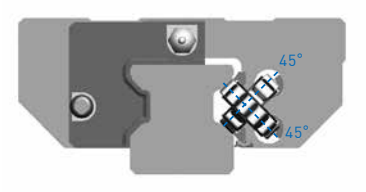

(2) Low Noise Design With SynchMotion® technology, rolling elements are interposed between the partitions of SynchMotion® to provide improved circulation. Due to the elimination of contact between the rolling elements, collision noise and sound levels are drastically reduced.

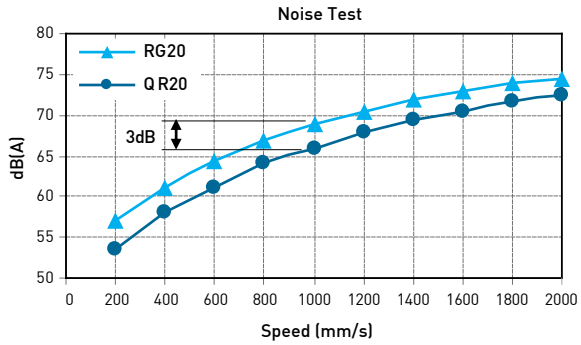

(3) Smooth Movement In standard linear guideways, rolling elements on the load side of the guide block begin rolling and push their way through the raceway. When they contact other rolling elements they create counter-rotational friction. This results in a great variation of rolling resistance. The QR linear guideway, with SynchMotion® technology prevents this condition.

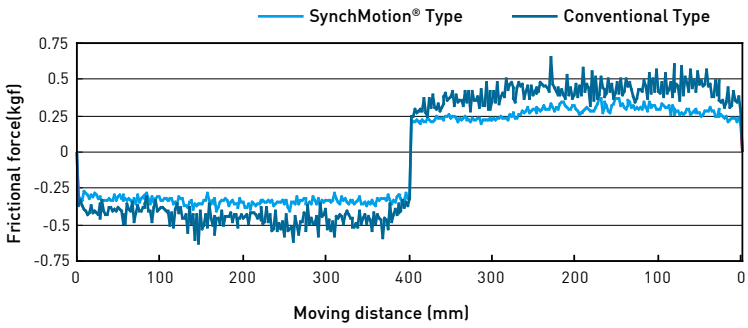

(4) The QR series is a type of linear guideway that uses rollers as the rolling elements. Elastic deformation of the linear contact surface, during load, is greatly reduced thereby offering greater rigidity and higher load capacities in all 4 load directions.

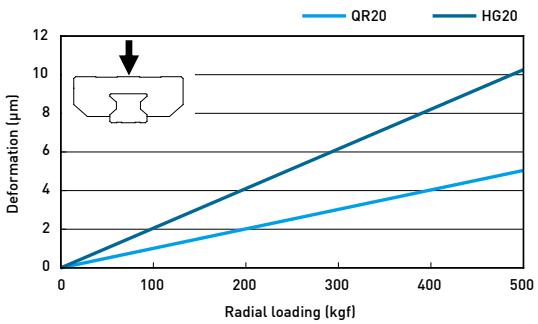

(5) Sample test

1. **Nominal life test**

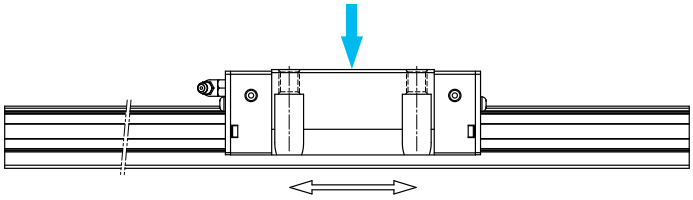

Table 2-11-1

Tested model 1: QRW20CC Preload: ZA class Max speed: 28m/min Acceleration: 1G Stroke: 0.2m Lubrication: grease held every 100 km External: 8.6 kN Traveling distance: 1024km	**Test results:** The nominal life of QRW20 is 1000km. After traveling 1024km, fatigue flaking did not appear on the surface of the raceway or rollers. And roller chain is not broken in this case. 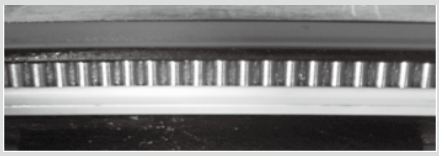

2. **Durability Test**

Table 2-11-2

Tested model 2: QRH20CA Preload: Z0 class Max speed: 180m/min Acceleration: 3G Stroke: 0.23m Oil feed rate: 0.14cm^3/hr External: 0km (No loading) Traveling distance: 10586km	**Test results:** After traveling 10586km, fatigue flaking did not appear on the surface of the raceway or rollers. And roller chain is not broken in this case. 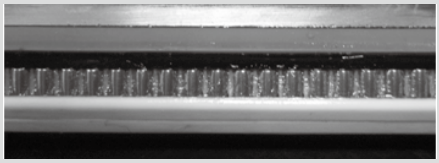

Note: The data listed are from samples.

2-11-2 Construction of QR Series

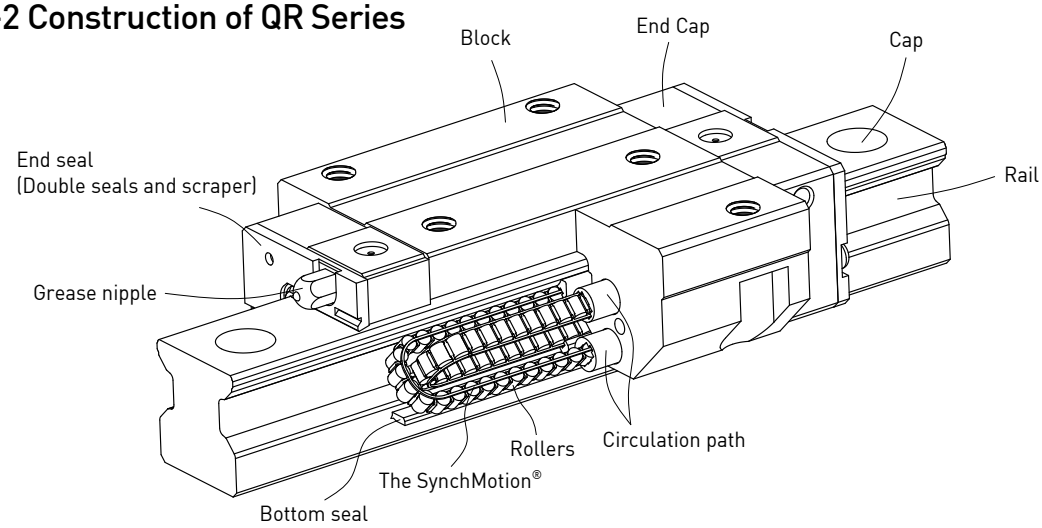

- Rolling circulation system: Block, Rail, End cap, Circulation path, rollers and the SynchMotion®.
- Lubrication system: Grease nipple and piping joint
- Dust protection system: End seal, Bottom seal, Cap, Double seals and Scraper

QR Series

Roller Type

2-11-3 Model Number of QR series

QR series linear guideways are classified into non-interchangeable and interchangeable types. The sizes of these two types are the same as one another. The main difference is that the interchangeable type of blocks and rails can be freely exchanged and they can maintain p-class accuracy. Because of strict dimensional control, the interchangeable type linear guideways are a wise choice for customers when rails do not need to be matched for an axis. The model number of the QR series identifies the size, type, accuracy class, preload class, etc.

(1) Non-interchangeable type

QR W 35 C C E 2 R 1640 E ZA P II + KK/E2+RC

- QR Series
- Block Type
  - W : Flange Type
  - H : Square Type
  - L : Square Type (Low)[3]
- Model size
  - 20, 25, 30, 35, 45
- Load Type
  - C : Heavy Load
  - H : Super Heavy Load
- Block Mounting
  - A : Mounting From Top
  - C : Top or Bottom
- E: Special Block
  - None: Standard Block
- No. of Blocks per Rail
- Rail Mounting Type
  - R : Mounting From Top
  - T : Bottom
- Rail Length (mm)
- E: Special Rail
  - None: Standard Rail
- Preload Code: Z0, ZA, ZB
- Precision Code: H, P, SP, UP
- No. of Rails per matched set [1]
- Dust Protection[2]
- E2: Self-Lubricant
- RC: Reinforced Cap

Note: 1. The roman numerals express a matched set of rails.
2. No symbol indicates standard protection (end seal and bottom seal).
ZZ : End seal, bottom seal and scraper
KK: Double seals, bottom seal and scraper.
DD: Double seals and bottom seal
3. Block type QRL is the low profile design of QRH (square type), the assembled height is same as QRW (flange type) in same size.

(2) Interchangeable type

- **Model Number of RG Block**

QR W 25 C A E ZA P + ZZ/E2

- QR Series
- Block Type
  - W : Flange Type
  - H : Square Type
  - L : Square Type (Low)[3]
- Model size
  - 20, 25, 30, 35, 45
- Load Type
  - C : Heavy Load
  - H : Super Heavy Load
- Block Mounting Type
  - A : Mounting From Top
  - C : Top or Bottom
- E: Special Block
  - None: Standard block
- Preload Code : Z0, ZA
- Precision Code : H, P
- Dust Protection[2]
- E2: Self-Lubricant

- **Model Number of QR Rail (QR and RG share the identical rails)**

RG R 25 R 1200 E P + RC

- QR/RG Series
- Interchangeable Rail
- Model size
  - 20, 25, 30, 35, 45
- Rail Mounting Type
  - R : Mounting From Top
  - T : Bottom
- Rail Length (mm)
- E: Special Rail,
  - None: Standard Rail
- Precision Code : H, P
- RC:Reinforced Cap

2-11-4 Types

(1) Block types

QR series offers two types of guide blocks, flange and square type. Because of the low assembly height and large mounting surface, the flange type is excellent for heavy moment load applications.

Table 2-11-3 **Block Types**

Type	Model	Shape	Height (mm)	Rail Length (mm)	Main Applications
Square	QRH-CA QRH-HA	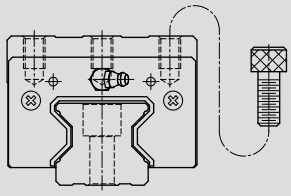	34 ↓ 70	100 ↓ 4000	○ Automation Systems ○ Transportation equipment ○ CNC machining centers ○ Heavy duty cutting machines ○ CNC grinding machines ○ Injection molding machines ○ Plano millers ○ Devices requiring high rigidity ○ Devices requiring high load capacity ○ Electric discharge machines
Square (low)	QRL-CA QRL-HA	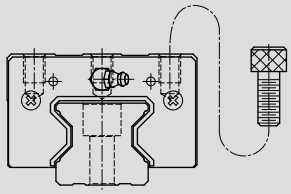	30 ↓ 60	100 ↓ 4000	
Flange	QRW-CC QRW-HC	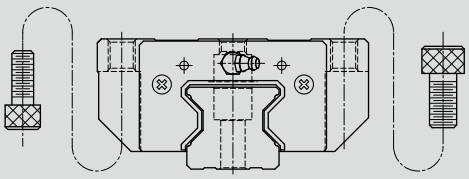	30 ↓ 60	100 ↓ 4000	

(2) Rail types

In addition to the standard top mounting type, HIWIN also offers the bottom mounting type of rails.

Table 2-11-4 **Rail Types**

Mounting from Top	Mounting from Bottom
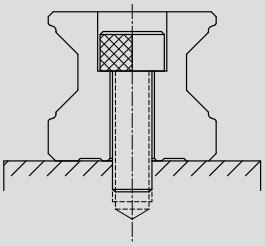	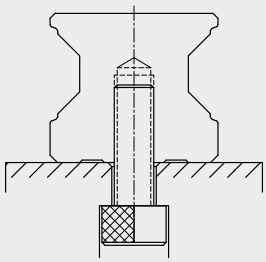

QR Series

Roller Type

2-11-5 Accuracy Classes

The accuracy of the QR series can be classified into four classes: high (H), precision (p), super precision (Sp) and ultra precision (Up). Customers may choose the class by referencing the accuracy requirements of the applied equipment.

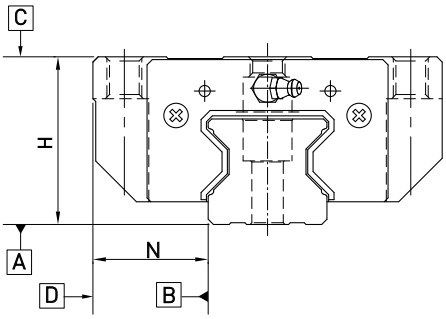

(1) Accuracy of non-interchangeable

Table 2-11-5 **Accuracy Standards** Unit: mm

Item	QR - 20			
Accuracy Classes	High (H)	Precision (P)	Super Precision (SP)	Ultra Precision (UP)
Dimensional tolerance of height H	± 0.03	0 - 0.03	0 - 0.015	0 - 0.008
Dimensional tolerance of width N	± 0.03	0 - 0.03	0 - 0.015	0 - 0.008
Variation of height H	0.01	0.006	0.004	0.003
Variation of width N	0.01	0.006	0.004	0.003
Running parallelism of block surface C to surface A	See Table 2-11-11			
Running parallelism of block surface D to surface B	See Table 2-11-11			

Table 2-11-6 **Accuracy Standards** Unit: mm

Item	QR- 25, 30, 35			
Accuracy Classes	High (H)	Precision (P)	Super Precision (SP)	Ultra Precision (UP)
Dimensional tolerance of height H	± 0.04	0 - 0.04	0 - 0.02	0 - 0.01
Dimensional tolerance of width N	± 0.04	0 - 0.04	0 - 0.02	0 - 0.01
Variation of height H	0.015	0.007	0.005	0.003
Variation of width N	0.015	0.007	0.005	0.003
Running parallelism of block surface C to surface A	See Table 2-11-11			
Running parallelism of block surface D to surface B	See Table 2-11-11			

Table 2-11-7 **Accuracy Standards** Unit: mm

Item	QR - 45			
Accuracy Classes	High (H)	Precision (P)	Super Precision (SP)	Ultra Precision (UP)
Dimensional tolerance of height H	± 0.05	0 - 0.05	0 - 0.03	0 - 0.02
Dimensional tolerance of width N	± 0.05	0 - 0.05	0 - 0.03	0 - 0.02
Variation of height H	0.015	0.007	0.005	0.003
Variation of width N	0.02	0.01	0.007	0.005
Running parallelism of block surface C to surface A	See Table 2-11-11			
Running parallelism of block surface D to surface B	See Table 2-11-11			

(2) Accuracy of interchangeable

Table 2-11-8 **Accuracy Standards**

Unit: mm

Item	QR - 20	
Accuracy Classes	High (H)	Precision (P)
Dimensional tolerance of height H	± 0.03	± 0.015
Dimensional tolerance of width N	± 0.03	± 0.015
Variation of height H	0.01	0.006
Variation of width N	0.01	0.006
Running parallelism of block surface C to surface A	See Table 2-11-11	
Running parallelism of block surface D to surface B	See Table 2-11-11	

Table 2-11-9 **Accuracy Standards**

Unit: mm

Item	QR- 25, 30, 35	
Accuracy Classes	High (H)	Precision (P)
Dimensional tolerance of height H	± 0.04	± 0.02
Dimensional tolerance of width N	± 0.04	± 0.02
Variation of height H	0.015	0.007
Variation of width N	0.015	0.007
Running parallelism of block surface C to surface A	See Table 2-11-11	
Running parallelism of block surface D to surface B	See Table 2-11-11	

Table 2-11-10 **Accuracy Standards**

Unit: mm

Item	QR - 45	
Accuracy Classes	High (H)	Precision (P)
Dimensional tolerance of height H	± 0.05	± 0.025
Dimensional tolerance of width N	± 0.05	± 0.025
Variation of height H	0.015	0.007
Variation of width N	0.02	0.01
Running parallelism of block surface C to surface A	See Table 2-11-11	
Running parallelism of block surface D to surface B	See Table 2-11-11	

QR Series

Roller Type

(3) Accuracy of running parallelism

Table 2-11-11 **Accuracy of Running Parallelism**

Rail Length (mm)	Accuracy (μm) H	P	SP	UP
~ 100	7	3	2	2
100 ~ 200	9	4	2	2
200 ~ 300	10	5	3	2
300 ~ 500	12	6	3	2
500 ~ 700	13	7	4	2
700 ~ 900	15	8	5	3
900 ~ 1,100	16	9	6	3
1,100 ~ 1,500	18	11	7	4
1,500 ~ 1,900	20	13	8	4
1,900 ~ 2,500	22	15	10	5
2,500 ~ 3,100	25	18	11	6
3,100 ~ 3,600	27	20	14	7
3,600 ~ 4,000	28	21	15	7

2-11-6 Preload

A preload can be applied to each guideway using oversized rollers. Generally, a linear motion guideway has negative clearance between the raceway and rollers to improve stiffness and maintain high precision. The QR series linear guideway offers three standard preloads for various applications and conditions.

Table 2-11-12

Class	Code	Preload	Condition
Light Preload	Z0	0.02C~ 0.04C	Certain load direction, low impact, low precision required
Medium Preload	ZA	0.07C~0.09C	High rigidity required, high precision required
Heavy Preload	ZB	0.12C~ 0.14C	Super high rigidity required, with vibration and impact

The figure shows the relationship between the rigidity, friction and nominal life. A preload no larger than ZA would be recommended for smaller model sizes to avoid over-preload affecting the life of the guideway.

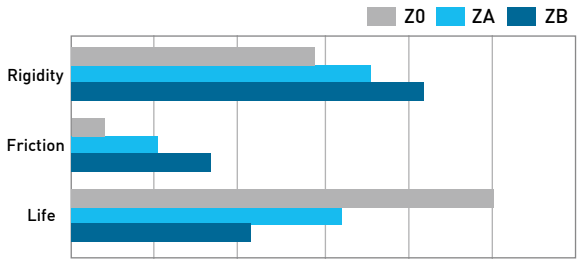

2-11-7 Mounting location

The standard location of the grease fitting is at both ends of the block, but the nipple can be mounted in the side or the top of block. For lateral installation, we recommend that the nipple be mounted at the non-reference side, otherwise please contact us. It is possible to carry out the lubrication by using an oil-piping joint. The figure shows the locations of the grease fitting.

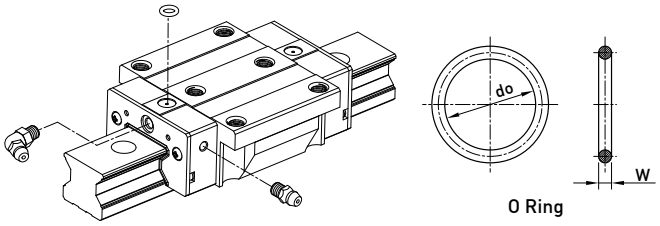

Table 2-11-13 **O-Ring size and max. permissible depth for piercing**

Size	O-Ring		Lube hole at top: max. permissible depth for piercing
	do (mm)	W (mm)	T_{max} (mm)
QR 20	2.5±0.15	1.5±0.15	4
QR 25	7.5±0.15	1.5±0.15	5.8
QR 30	7.5±0.15	1.5±0.15	6.2
QR 35	7.5±0.15	1.5±0.15	8.65
QR 45	7.5±0.15	1.5±0.15	9.5

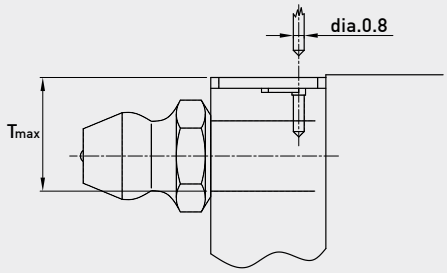

2-11-8 Dust Proof Accessories

(1) Codes of accessories

If the following accessories are needed, please add the code followed by the model number.

Table 2-11-14

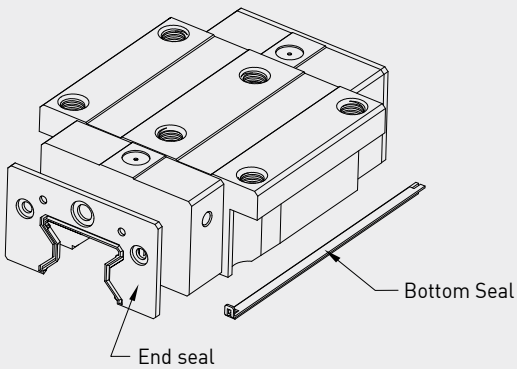

No symbol: Standard Protection (End seal + Bottom Seal)

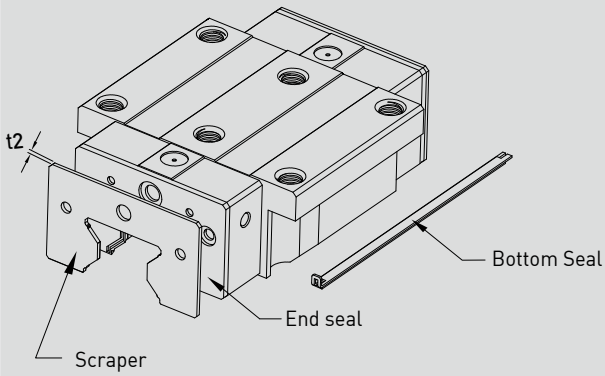

ZZ (End seal + Bottom Seal + Scraper)

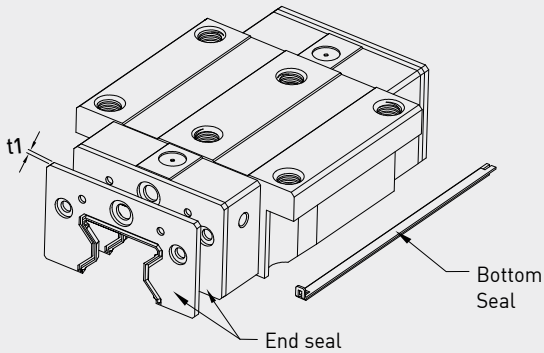

DD (Double seals + Bottom Seal)

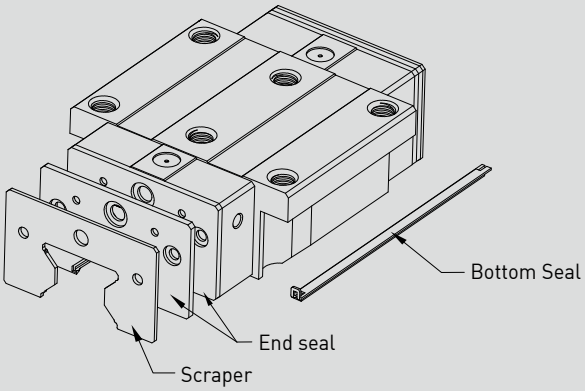

KK (Double seals + Bottom Seal + Scraper)

QR Series

Roller Type

(2) End seal and bottom seal

To prevent life reduction caused by iron chips or dust entering the block.

(3) Double seals

Enhances the wiping effect, foreign matter can be completely wiped off.

Table 2-11-15 **Dimensions of end seal**

Size	Thickness (t1) (mm)	Size	Thickness (t1) (mm)
QR20 ES	2.2	QR35 ES	2.5
QR25 ES	2.2	QR45 ES	3.6
QR30 ES	2.4		

(4) Scraper

The scraper removes high-temperature iron chips and larger foreign objects.

Table 2-11-16 **Dimensions of scraper**

Size	Thickness (t2) (mm)	Size	Thickness (t2) (mm)
QR20 SC	1.0	QR35 SC	1.5
QR25 SC	1.0	QR45 SC	1.5
QR30 SC	1.5		

(5) Dimensions of block equipped with the dustproof parts

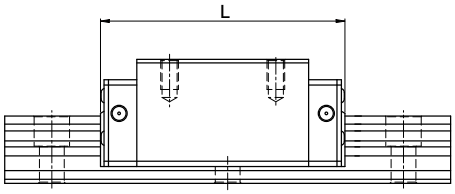

Table 2-11-17 **Overall block length**

unit: mm

Size	Overall block length (L)			
	SS	ZZ	DD	KK
QR20C	86.0 (88.0)	88.0 (92.4)	90.4 (92.4)	92.4 (96.8)
QR25C	97.7 (101.5)	99.9 (105.9)	102.3 (105.9)	104.3 (110.3)
QR25H	112.9 (116.5)	114.9 (120.9)	117.3 (120.9)	119.3 (125.3)
QR30C	109.8 (113.4)	112.8 (118.8)	114.6 (118.2)	117.6 (123.6)
QR30H	131.8 (135.4)	134.8 (140.8)	136.6 (140.2)	139.6 (145.6)
QR35C	124.0 (129.4)	127.0 (135.0)	129.0 (134.4)	132.0 (140.0)
QR35H	151.5 (156.9)	154.5 (162.5)	156.5 (161.9)	159.5 (167.5)
QR45C	153.2 (156.4)	156.2 (164.2)	160.4 (163.6)	163.4 (171.4)
QR45H	187.0 (190.2)	190.0 (198.0)	194.2 (197.4)	197.2 (205.2)

Note : The marking of "( )" denotes the maximum block length with screws, lips of end seals, etc.

2-11-9 Friction

The maximum value of resistance per end seal are as shown in the table.

Table 2-11-18 **Seal Resistance**

Size	Resistance N (kgf)	Size	Resistance N (kgf)
QR 20 ES	2.45 (0.25)	QR 35 ES	3.53 (0.36)
QR 25 ES	2.74 (0.28)	QR 45 ES	4.21 (0.43)
QR 30 ES	3.31 (0.31)		

2-11-10 The Accuracy Tolerance of Mounting Surface

(1) The accuracy tolerance of rail-mounting surface

As long as the accuracy requirements of the mounting surfaces shown in the following tables are met, the high accuracy, high rigidity and long life of the QR series linear guideway will be maintained without any difficulty.

- **The parallelism tolerance of reference surface (P)**

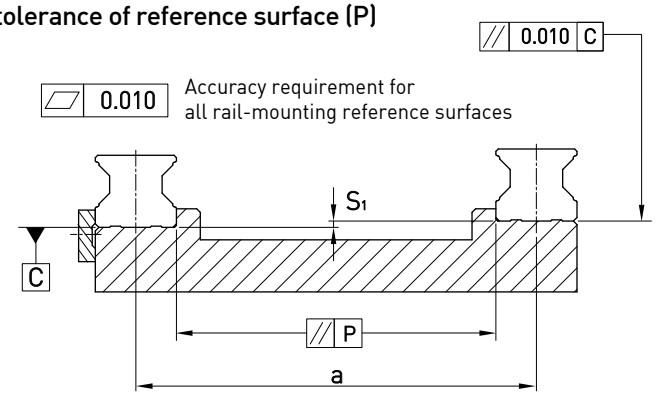

Table 2-11-19 **Max. Parallelism Tolerance (P)**

unit: μm

Size	Preload classes		
	Light Preload (Z0)	Medium Preload (ZA)	Heavy Preload (ZB)
QR20	8	6	4
QR25	9	7	5
QR30	11	8	6
QR35	14	10	7
QR45	17	13	9

- **The accuracy tolerance of reference surface height (S_1)**

$$S_1 = a \times K$$

S_1 : Max. tolerance of height
a : Distance between paired rails
K : Coefficient of tolerance of height

Table 2-11-20 **Coefficient of tolerance of height**

Size	Preload classes		
	Light Preload (Z0)	Medium Preload (ZA)	Heavy Preload (ZB)
K	2.2×10^{-4}	1.7×10^{-4}	1.2×10^{-4}

QR Series

Roller Type

(2) The accuracy tolerance of block-mounting surface

- The tolerance of the height of reference surface when two or more pieces are used in parallel (S_2)

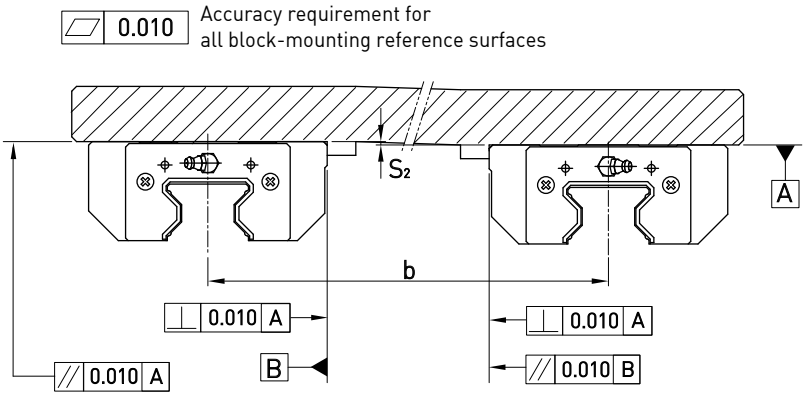

$$S_2 = b \times 4.2 \times 10^{-5}$$

S_2 : Max. tolerance of height
b : Distance between paired blocks

- The tolerance of the height of reference surface when two or more pieces are used in parallel (S_3)

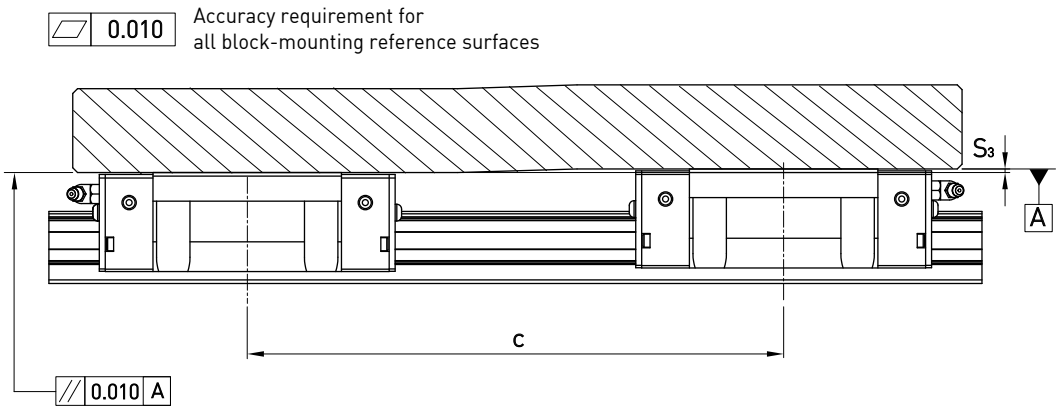

$$S_3 = c \times 4.2 \times 10^{-5}$$

S_3 : Max. tolerance of height
c : Distance between paired blocks

2-11-11 Cautions for Installation

(1) Shoulder heights and fillets

Improper shoulder heights and fillets of mounting surfaces will cause a deviation in accuracy and the interference with the rail or block. As long as the recommended shoulder heights and fillets are followed, installation inaccuracies should be eliminated.

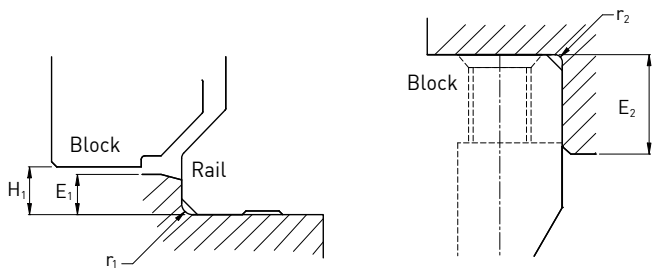

Table 2-11-21

Size	Max. radius of fillets r_1 (mm)	Max. radius of fillets r_2 (mm)	Shoulder height beside the rail E_1 (mm)	Shoulder height beside the block E_2 (mm)	Clearance under block H_1 (mm)
QR20	0.5	0.5	3.5	5	5
QR25	1.0	1.0	5	5	5.5
QR30	1.0	1.0	5	5	6
QR35	1.0	1.0	6	6	6.5
QR45	1.0	1.0	7	8	8

(2) Tightening Torque of Mounting Bolts

Improper tightening of mounting bolts will seriously influence the accuracy of a linear guideway. The following tightening torque for the different sizes of bolt is recommended.

Table 2-11-22

Size	Bolt size	Torque N-cm(kgf-cm)		
		Iron	Casting	Aluminum
QR20	M5×0.8P×20L	883 (90)	588 (60)	441 (45)
QR25	M6×1P×20L	1373 (140)	921 (94)	686 (70)
QR30	M8×1.25P×25L	3041 (310)	2010 (205)	1470 (150)
QR35	M8×1.25P×25L	3041 (310)	2010 (205)	1470 (150)
QR45	M12×1.75P×35L	11772 (1200)	7840 (800)	5880 (600)

QR Series

Roller Type

2-11-12 Dimensions for QR series

(1) QRH-CA / QRH-HA

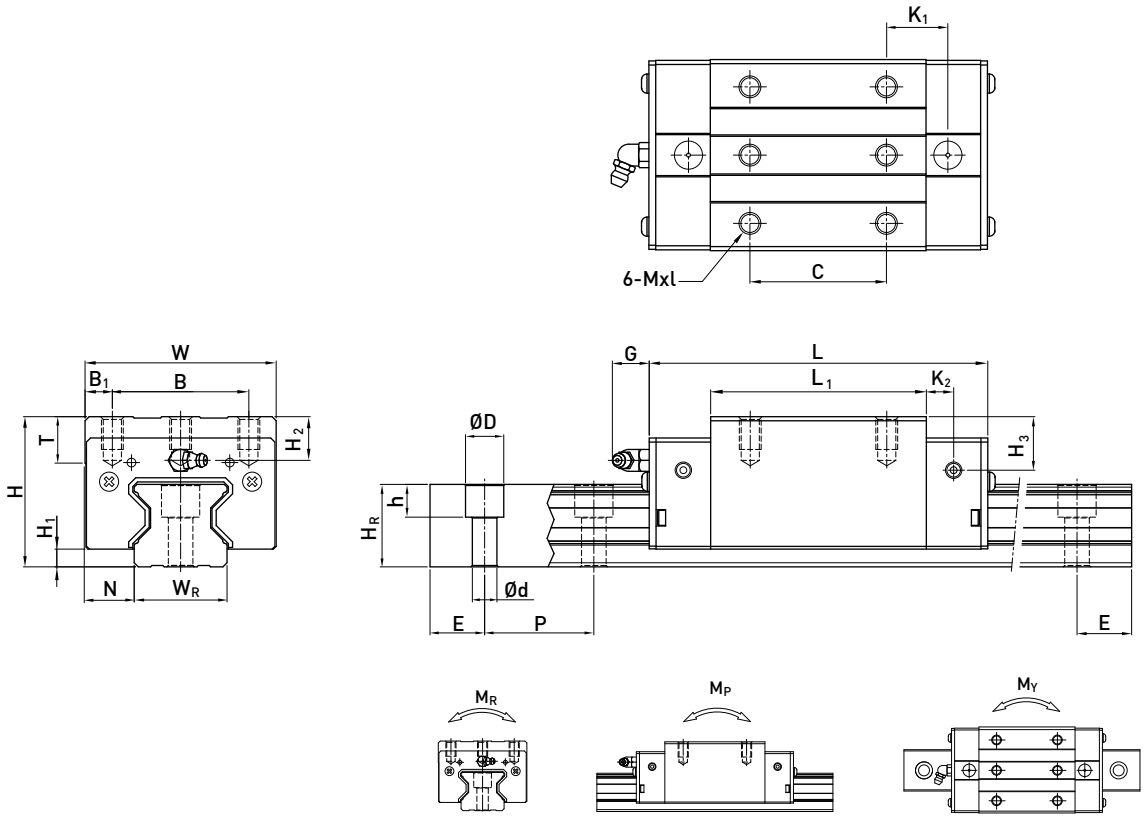

Model No.	Dimensions of Assembly (mm)			Dimensions of Block (mm)													Dimensions of Rail (mm)							Mounting Bolt for Rail	Basic Dynamic Load Rating	Basic Static Load Rating	Static Rated Moment			Weight	
	H	H_1	N	W	B	B_1	C	L_1	L	K_1	K_2	G	Mxl	T	H_2	H_3	W_R	H_R	D	h	d	P	E	(mm)	C(kN)	C_0 (kN)	M_R kN-m	M_P kN-m	M_Y kN-m	Block kg	Rail kg/m
QRH20CA	34	5	12	44	32	6	36	57.5	86	15.8	6	5.3	M5 x 8	8	8.3	8.3	20	21	9.5	8.5	6	30	20	M5 x20	26.3	38.9	0.591	0.453	0.453	0.40	2.76
QRH25CA	40	5.5	12.5	48	35	6.5	35	66	97.9	20.75	7.25	12	M6 x 8	9.5	10.2	10	23	23.6	11	9	7	30	20	M6 x20	38.5	54.4	0.722	0.627	0.627	0.60	3.08
QRH25HA							50	81	112.9	21.5															44.7	65.3	0.867	0.907	0.907	0.74	3.08
QRH30CA	45	6	16	60	40	10	40	71	109.8	23.5	8	12	M8 x10	9.5	9.5	10.3	28	28	14	12	9	40	20	M8 x25	51.5	73.0	1.284	0.945	0.945	0.89	4.41
QRH30HA							60	93	131.8	24.5															64.7	95.8	1.685	1.63	1.63	1.15	4.41
QRH35CA	55	6.5	18	70	50	10	50	79	124	22.5	10	12	M8 x12	12	16	19.6	34	30.2	14	12	9	40	20	M8 x25	77.0	94.7	1.955	1.331	1.331	1.56	6.06
QRH35HA							72	106.5	151.5	25.25															95.7	126.3	2.606	2.335	2.335	2.04	6.06
QRH45CA	70	8	20.5	86	60	13	60	106	153.2	31	10	12.9	M10x17	16	20	24	45	38	20	17	14	52.5	22.5	M12 x35	123.2	156.4	3.959	2.666	2.666	3.16	9.97
QRH45HA							80	139.8	187	37.9															150.8	208.6	5.278	4.694	4.694	4.10	9.97

Note : 1. 1 kgf = 9.81 N
2. The theoretical dynamic rated load is C_{100R}, if necessary C_{50R} conversion formula is as follows : $C_{50R} = 1.23 \times C_{100R}$

(2) QRL-CA / QRL-HA

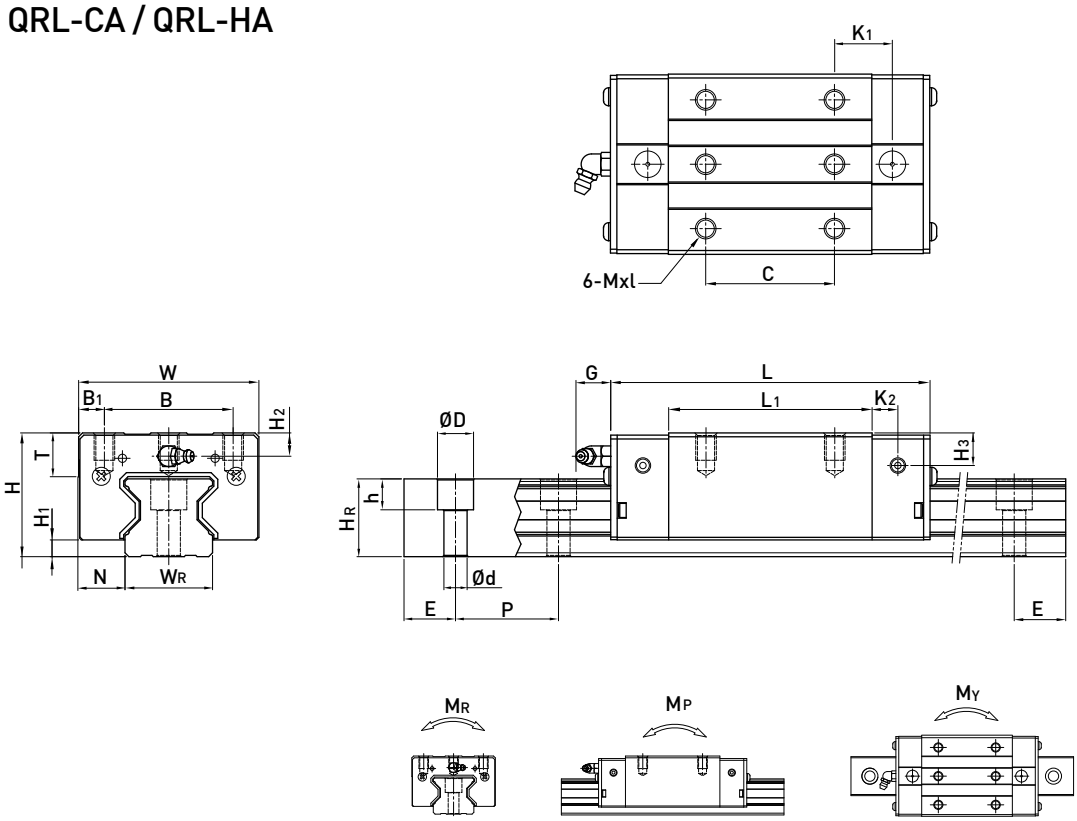

Model No.	Dimensions of Assembly (mm)			Dimensions of Block (mm)													Dimensions of Rail (mm)							Mounting Bolt for Rail	Basic Dynamic Load Rating	Basic Static Load Rating	Static Rated Moment			Weight	
	H	H_1	N	W	B	B_1	C	L_1	L	K_1	K_2	G	Mxl	T	H_2	H_3	W_R	H_R	D	h	d	P	E	(mm)	C(kN)	C_0 (kN)	M_R kN-m	M_P kN-m	M_Y kN-m	Block kg	Rail kg/m
QRL20CA	30	5	12	44	32	6	36	57.5	86	15.8	6	5.3	M5x6	8	4.3	4.3	20	21	9.5	8.5	6	30	20	M5x20	26.3	38.9	0.591	0.453	0.453	0.32	2.76
QRL25CA	36	5.5	12.5	48	35	6.5	35	66	97.9	20.75	7.25	12	M6x8	9.5	6.2	6	23	23.6	11	9	7	30	20	M6x20	38.5	54.4	0.722	0.627	0.627	0.50	3.08
QRL25HA							50	81	112.9	21.5															44.7	65.3	0.867	0.907	0.907	0.62	
QRL30CA	42	6	16	60	40	10	40	71	109.8	23.5	8	12	M8x10	9.5	6.5	7.3	28	28	14	12	9	40	20	M8x25	51.5	73.0	1.284	0.945	0.945	0.79	4.41
QRL30HA							60	93	131.8	24.5															64.7	95.8	1.685	1.63	1.63	1.02	
QRL35CA	48	6.5	18	70	50	10	50	79	124	22.5	10	12	M8x12	12	9	12.6	34	30.2	14	12	9	40	20	M8x25	77.0	94.7	1.955	1.331	1.331	1.26	6.06
QRL35HA							72	106.5	151.5	25.25															95.7	126.3	2.606	2.335	2.335	1.63	
QRL45CA	60	8	20.5	86	60	13	60	106	153.2	31	10	12.9	M10x17	16	10	14	45	38	20	17	14	52.5	22.5	M12x35	123.2	156.4	3.959	2.666	2.666	2.45	9.97
QRL45HA							80	139.8	187	37.9															150.8	208.6	5.278	4.694	4.694	3.17	

Note : 1. 1 kgf = 9.81 N
2. The theoretical dynamic rated load is C_{100R}, if necessary C_{50R} conversion formula is as follows : $C_{50R} = 1.23 \times C_{100R}$

QR Series

Roller Type

(3) QRW-CC / QRW-HC

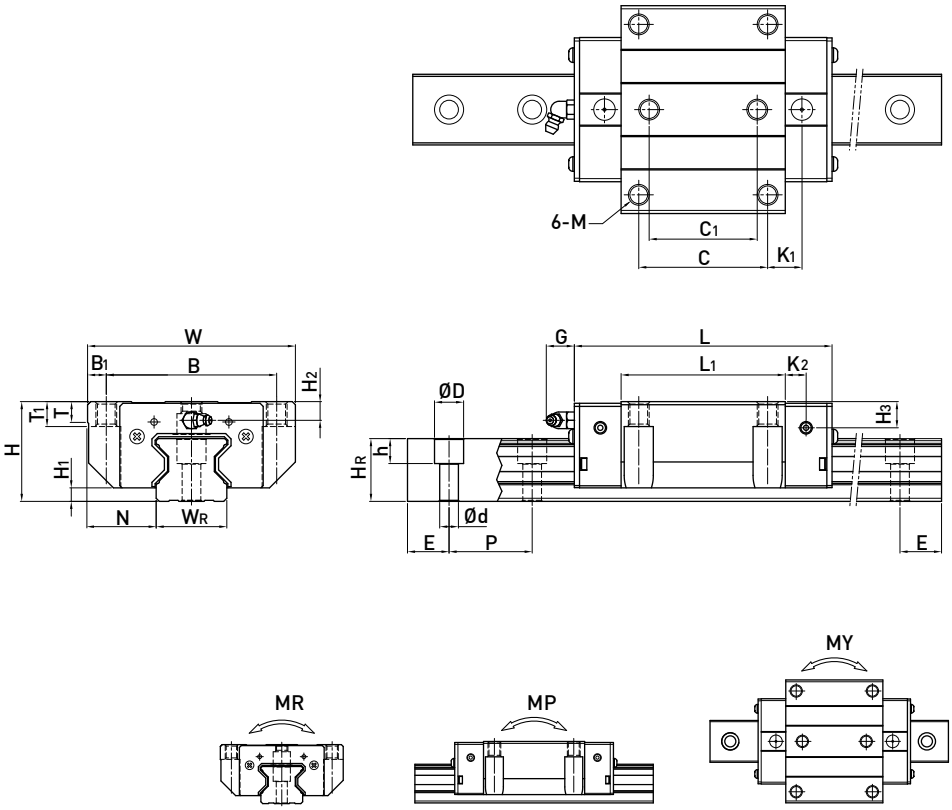

Model No.	Dimensions of Assembly (mm)			Dimensions of Block (mm)															Dimensions of Rail (mm)							Mounting Bolt for Rail	Basic Dynamic Load Rating	Basic Static Load Rating	Static Rated Moment			Weight	
	H	H_1	N	W	B	B_1	C	C_1	L_1	L	K_1	K_2	G	M	T	T_1	H_2	H_3	W_R	H_R	D	h	d	P	E	(mm)	C(kN)	C_0 (kN)	M_R kN-m	M_P kN-m	M_Y kN-m	Block kg	Rail kg/m
QRW20CC	30	5	21.5	63	53	5	40	35	57.5	86	13.8	6	5.3	M6	8	10	4.3	4.3	20	21	9.5	8.5	6	30	20	M5x20	26.3	38.9	0.591	0.453	0.453	0.47	2.76
QRW25CC	36	5.5	23.5	70	57	6.5	45	40	66	97.9	15.75	7.25	12	M8	9.5	10	6.2	6	23	23.6	11	9	7	30	20	M6x20	38.5	54.4	0.722	0.627	0.627	0.71	3.08
QRW25HC									81	112.9	24																44.7	65.3	0.867	0.907	0.907	0.90	3.08
QRW30CC	42	6	31	90	72	9	52	44	71	109.8	17.5	8	12	M10	9.5	10	6.5	7.3	28	28	14	12	9	40	20	M8x25	51.5	73.0	1.284	0.945	0.945	1.15	4.41
QRW30HC									93	131.8	28.5																64.7	95.8	1.685	1.63	1.63	1.51	4.41
QRW35CC	48	6.5	33	100	82	9	62	52	79	124	16.5	10	12	M10	12	13	9	12.6	34	30.2	14	12	9	40	20	M8x25	77.0	94.7	1.955	1.331	1.331	1.74	6.06
QRW35HC									106.5	151.5	30.25																95.7	126.3	2.606	2.335	2.335	2.38	6.06
QRW45CC	60	8	37.5	120	100	10	80	60	106	153.2	21	10	12.9	M12	14	15	10	14	45	38	20	17	14	52.5	22.5	M12x35	123.2	156.4	3.959	2.666	2.666	3.41	9.97
QRW45HC									139.8	187	37.9																150.8	208.6	5.278	4.694	4.694	4.54	9.97

Note : 1. 1 kgf = 9.81 N
2. The theoretical dynamic rated load is C_{100R}, if necessary C_{50R} conversion formula is as follows : $C_{50R} = 1.23 \times C_{100R}$

2-12 AG Series - Angle Linear Guideway

AG series angle linear guideway is designed with circular-arc groove and the same structure as HG series, and are ground with special procedure to make sure the X-Y translation is in high perpendicularity. The integrated design increases the stiffness by 50%, reduces weight and lowers the assembly height by 15%, which contributes to higher precision translation and achieves higher production quality.

2-12-1 Product Features

(1)More compact design
Eliminates fastener plate for saving equipment weight and increasing work space.

(2)High positional accuracy
Two rails are machined with high precision in relative straightness. Extremely high accuracy in verticality is achieved.

(3)High torsional rigidity
The rigidity of AG block is 50% higher than a combination of two HG blocks which secured back to back together.

2-12-2 Construction of AG Series

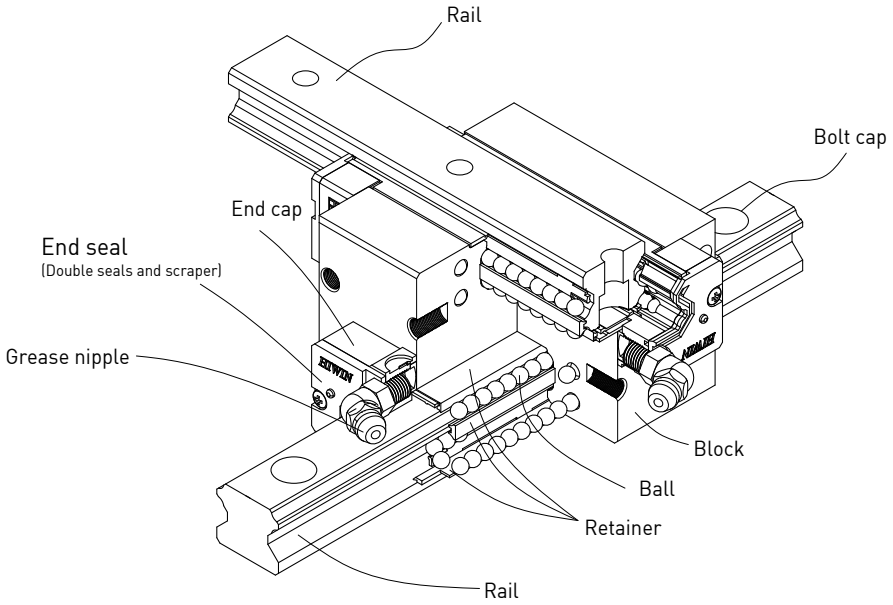

- Rolling circulation system: Block, Rail, End Cap and Retainer
- Lubrication system: Grease Nipple and Piping Joint
- Dust protection system: End seal, Bottom Seal, Bolt Cap, Double Seals and Scraper

AG Series

Angle Linear Guideway

2-12-3 Model Number of AG Series

The AG series linear guideway only has non-interchangeable type to ensure perpendicularity of two rails.
If other accuracy grade is required, please contact HIWIN.
The model number of AG series contains the size, type, accuracy and preload class, etc.

- **Non-interchangeable type**

AG 25 C E 2 R 1000 E / R 500 E Z0 P II + DD/E2+RC

- AG Series
- Model size: 20, 25,30
- Load Type
  C：Heavy Load
  H：Super Heavy Load
- E：Special
  None：Standard Block
- No. of Blocks per Rail
- Rail Mounting Type (X Axis)
  R：Mounting From Top
  T：Bottom
- Rail Length of X Axis (mm)
- E：Special Rail (X Axis)
  None：Standard Rail (X Axis)
- Rail Mounting Type (Y Axis)
  R：Mounting From Top
  T：Bottom
- Rail Length of Y Axis (mm)
- E：Special Rail (Y Axis)
  None：Standard Rail (Y Axis)
- Preload Code：Z0, ZA, ZB
- Precision Code：P
- No. of rails per axis set[1]
- Dust Protection[2、3]
  E2：Self-Lubricant
  SE：Metallic End Cap
- Reinforced Cap
- RC：

Note：
1. The roman numerals express a matched set od rails.
2. No symbol indicates standard protection(end seal and bottom seal).
3. Please refer to HG series for Dust Proof Accessories related information.

2-12-4 Types

(1) Block Types

HIWIN provides AG series linear guideway in cross and rectangular type, which has high accuracy in perpendicularity of two rails.

Table 2-12-1 **Block Types**

Type	Model	Shape	Height (mm)	Rail Length (mm)	Main Application
Square	AG-H	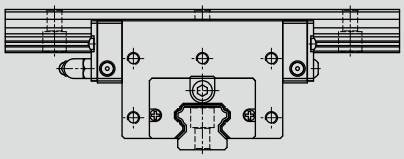	57 ↓ 82	100 ↓ 1200	○ Sliding Head Lathe (Swiss lathe) ○ Vibration Test Machine ○ Automated Robot Dispenser ○ XY moving platform ○ Measuring instrument ○ Vertical Lathe ○ Slant Bed Lathes
	AG-C	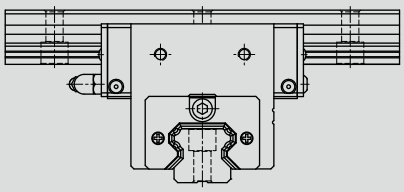	70 ↓ 82	100 ↓ 1200	

(2) Rail types

Besides the standard top mounting type, the bottom mounting type is also available.

Table 2-12-2 **Rail Types**

Mounting from Top	Mounting from bottom
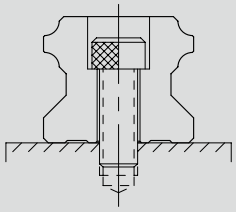	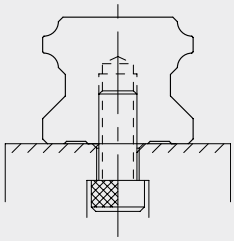

Note: Please refer to the HG series for relevant rail dimensions.

2-12-5 Accuracy Classes

Accuracy of AG series linear guideway has only one accuracy grade to ensure the perpendicularity of two rails. If other accuracy grade is required, please contact HIWIN.

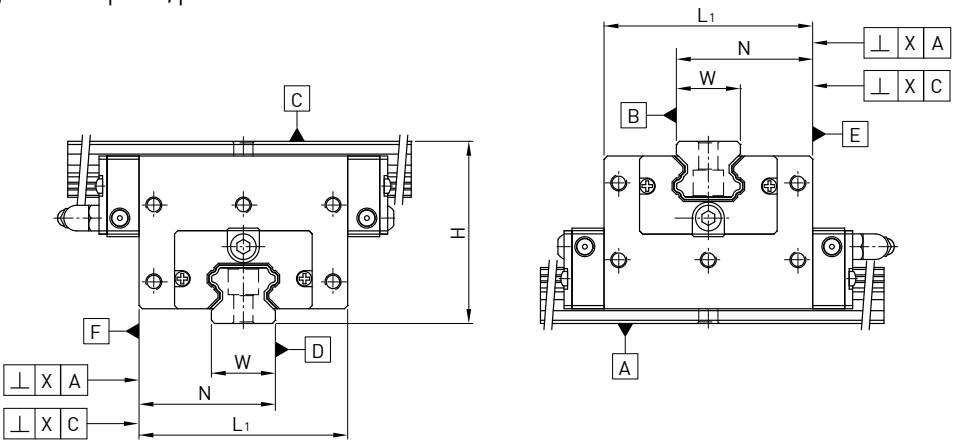

(1) Accuracy of non-interchangeable guideways

Table 2-12-3 **Accuracy Standards**

Unit: mm

Item	AG20	AG25	AG30
Accuracy Classes	Precision (P)	Precision (P)	Precision (P)
Pair variation of height H	0.01	0.01	0.01
Pair variation of height N	0.01	0.01	0.01
Perpendicularity of rail surface B to rail surface D	0.005 / Block length	0.008 / Block length	0.01 / Block length
Running parallelism of rail surface C to rail surface A	See Table 2-12-4		
Running parallelism of rail surface A to rail surface C	See Table 2-12-4		
Running parallelism of block surface F to rail surface D	See Table 2-12-4		
Running parallelism of block surface E to rail surface B	See Table 2-12-4		

Size	Block length (mm)
AG20H	65.2
AG25C	58
AG25H	78.6
AG30C	70
AG30H	93

AG Series

Angle Linear Guideway

(2) Accuracy of running parallelism

Table 2-12-4 **Accuracy of Running Parallelism**

Rail Length (mm)	Accuracy (μm) P	Rail Length (mm)	Accuracy (μm) P
~ 100	2	500 ~ 700	4
100 ~ 200	2	700 ~ 900	5
200 ~ 300	3	900 ~ 1,100	6
300 ~ 500	3	1,100 ~ 1,200	7

2-12-6 Preload

(1) Definition

A preload can be applied to each guideway. Oversized balls are used. Generally, a linear motion guideway has a negative clearance between groove and balls in order to improve stiffness and maintain high precision. The figure shows the load is multiplied by the preload, the rigidity is doubled and the deflection is reduced by one half.

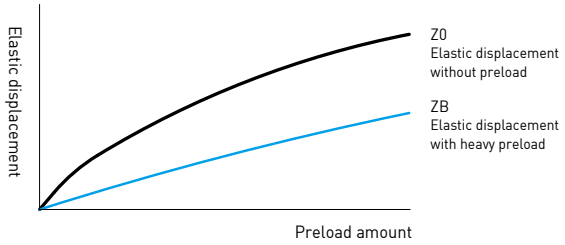

(2) Preload classes

HIWIN offers three classes of standard preload for various applications and conditions.

Table 2-12-5 **Preload Classes**

Class	Code	Preload	Condition	Examples of Application
Light Preload	Z0	0~ 0.02C	Certain load direction,low impact, low precision required	Transportation devices, auto-packing machines, X-Y axis for general industrial machines, welding machines, welders
Medium Preload	ZA	0.05C~0.07C	High precision required	Machining centers, Z axis for general industrial, machines, EDM, NC lathes, Precision X-Y tables, measuring equipment
Heavy Preload	ZB	0.10C~ 0.12C	High rigidity required, with vibration and impact	Machining centers, grinding machines, NC lathes, horizontal and vertical milling machines, Z axis of machine tools, Heavy cutting machines

Class	Non-Interchangeable Guideway
Preload classes	Z0, ZA, ZB

Note: The "C" in the preload column denotes basic dynamic load rating.

2-12-7 Lubrication

(1) Grease

- Grease nipple

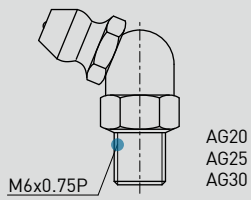

NO.34320001

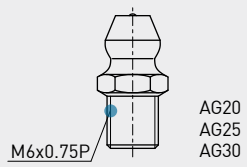

NO.34310003(OPTION)

Mounting location

The standard location of the grease fitting is at both ends of the block, the nipple can be mounted at each side of block. For lateral installation, we recommend that the nipple be mounted at the non-reference side, otherwise please contact us. It is possible to perform lubrication by using the oil-piping joint.

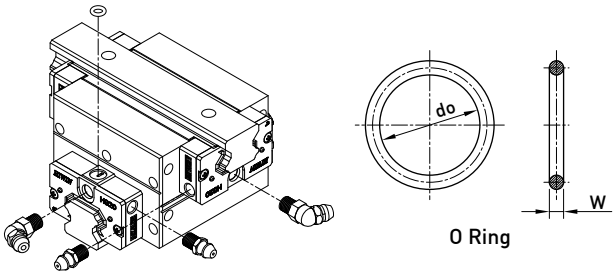

Table 2-12-6 **O-Ring size and max. permissible depth for piercing**

Size	O-Ring		Lube hole at top: max. permissible depth for piercing
	do (mm)	W (mm)	T_{max} (mm)
AG 20	4.5±0.15	1.5±0.15	5.7
AG 25	4.5±0.15	1.5±0.15	5.8
AG 30	4.5±0.15	1.5±0.15	6.3

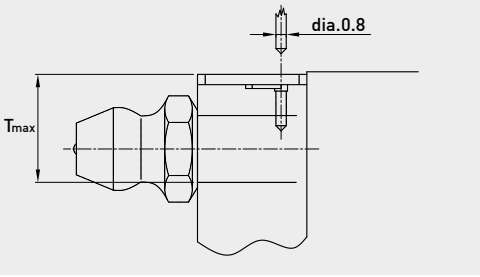

The lubricant amount for a block filled with grease

Table 2-12-7 **The lubricant Amount for a Block Filled with Grease**

Size	Heavy load (cm^3)	Super heavy load (cm^3)
AG 20	4	6
AG 25	10	12
AG 30	14	16

Frequency of replenishment

Check the grease every 100 km, or every 3-6 months.

(2) Oil

The recommended viscosity of oil is about 30~150cSt. If customers need to use oil-type lubrication, please inform us.

Types of oil piping joint

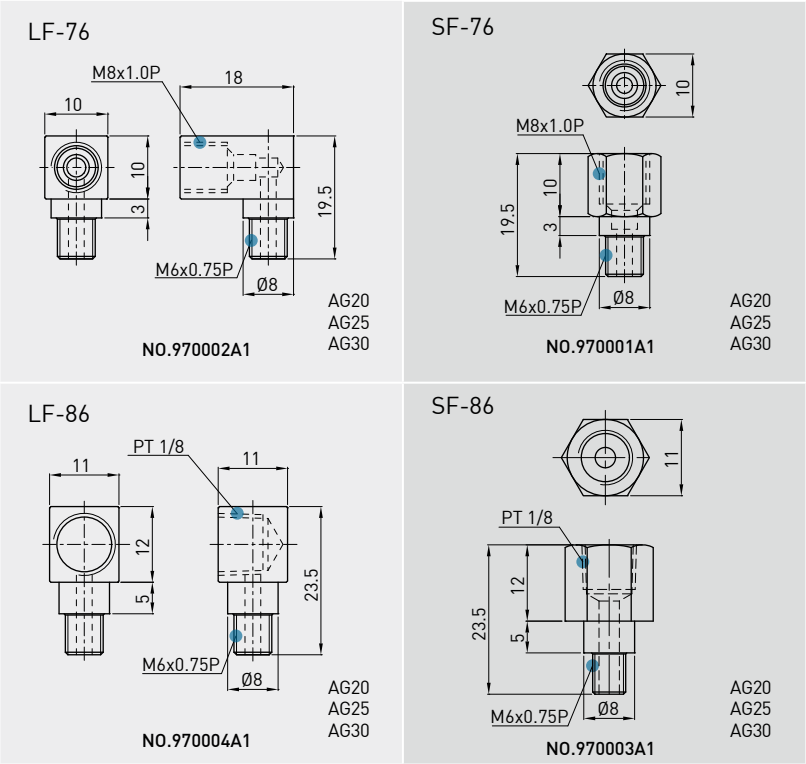

AG Series

Angle Linear Guideway

(3) Dimensions of block equipped with the parts

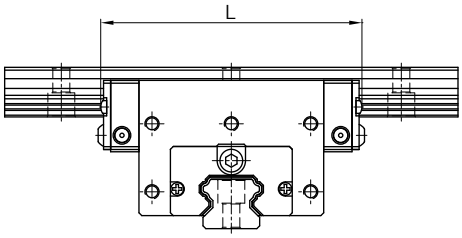

Table 2-12-8 **Overall block length**

unit: mm

Size	Overall block length (L)					
	SS/SH	ZZ/ZH	DD/DH	KK/KH	SW	ZW
*AG20H	92.2 (94.0)	97.2 (99.2)	97.5 (99.0)	102.2 (104.2)	93.2 (93.2)	101.0 (102.4)
*AG25C	84.0 (85.0)	89.0 (91.0)	89.0 (90.0)	94.0 (96.0)	85.0 (85.0)	92.8 (94.8)
*AG25H	104.6 (105.6)	109.6 (111.6)	109.6 (110.6)	114.6 (116.6)	105.6 (105.6)	113.4 (115.4)
*AG30C	97.4 (99.4)	105.4 (107.4)	104.8 (106.8)	112.8 (114.8)	99.0 (100.4)	107.2 (109.2)
*AG30H	120.4 (122.4)	128.4 (130.4)	127.8 (129.8)	135.8 (137.8)	122.0 (123.4)	130.2 (132.2)

Note : 1. For the marking of "*", it means this specification is available for SH/ZH/DH/KH dust proof accessories.
2. The marking of "( )" denotes the maximum block length with screws, lips of end seals, etc.

2-12-8 Friction

The maximum value of resistance per end seal are as shown in the table.

Table 2-12-9 **Seal Resistance**

Size	Resistance N (kgf)
AG20	2.75 (0.28)
AG25	3.14 (0.32)
AG30	3.53 (0.36)

Note: 1. 1kgf=9.81N
2. Please inform HIWIN if low friction request is required.

2-12-9 The Accuracy Tolerance of Mounting Surface

Because of the circular-arc contact design, the AG linear guideway can compensate for some surface-error on installation and still maintain smooth linear motion.
As long as the accuracy requirements for the mounting surface are followed, high accuracy and rigidity of linear motion of the guideway can be obtained without any difficulty. For fast installation and smooth movement, HIWIN offers the normal clearance type of preload to customers of its high absorption ability of the deviation in mounting surface accuracy.

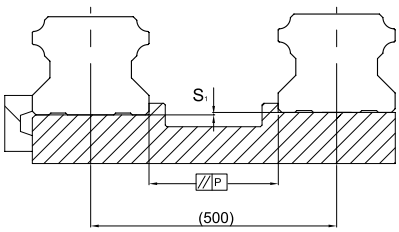

Table 2-12-10 **Max. Parallelism Tolerance (P)**

unit: μm

Size	Preload classes		
	Z0	ZA	ZB
AG20	25	20	18
AG25	30	22	20
AG30	40	30	27

Table 2-12-11 **Max. Tolerance of Reference Surface Height (S_1)** unit: μm

Size	Preload classes		
	Z0	ZA	ZB
AG20	130	85	50
AG25	130	85	70
AG30	170	110	90

Note : Permissible value is proportional to the axial distance

2-12-10 Cautions for Installation

(1) Shoulder heights and fillets

Improper shoulder heights and fillets of mounting surfaces will cause a deviation in accuracy and the interference with the rail or block. As long as the recommended shoulder heights and fillets are followed, installation inaccuracies should be eliminated.

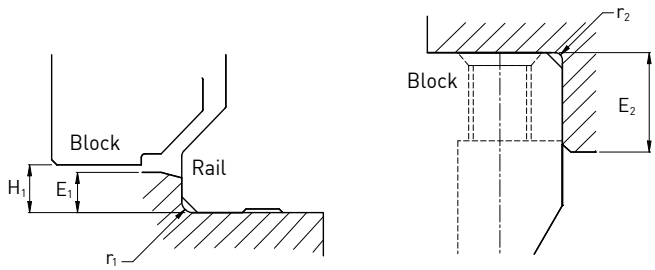

Table 2-12-12 **Shoulder Heights and Fillets**

Size	Max. radius of fillets r_1 (mm)	Max. radius of fillets r_2 (mm)	Shoulder height beside the rail E_1 (mm)	Shoulder height beside the block E_2 (mm)	Clearance under block H_1 (mm)
AG20	0.5	0.5	3.5	5.0	4.6
AG25	1.0	1.0	5.0	5.0	5.5
AG30	1.0	1.0	5.0	5.0	6.0

(2) Tightening Torque of Bolts for Installation

Improper tightening of bolts will seriously influence the accuracy of Linear Guideway installation. The following tightening torques for different sizes of bolts are recommended.

Table 2-12-13 **Mounting Torque**

Size	Bolt size	Torque N-cm (kgf-cm)		
		Iron	Casting	Aluminum
AG 20	M5×0.8P×16L	883(90)	588(60)	441(45)
AG 25	M6×1P×20L	1373(140)	921(94)	686(70)
AG 30	M8×1.25P×25L	3041(310)	2010(205)	1470(150)

Note:1 kgf=9.81 N

AG Series

Angle Linear Guideway

2-12-11 Standard and Maximum Lengths of Rail

HIWIN offers standard rail lengths for customer needs. For non-standard E-values, the recommended dimension should no greater than 1/2 of the pitch (P) dimension. This will prevent an unstable rail end.

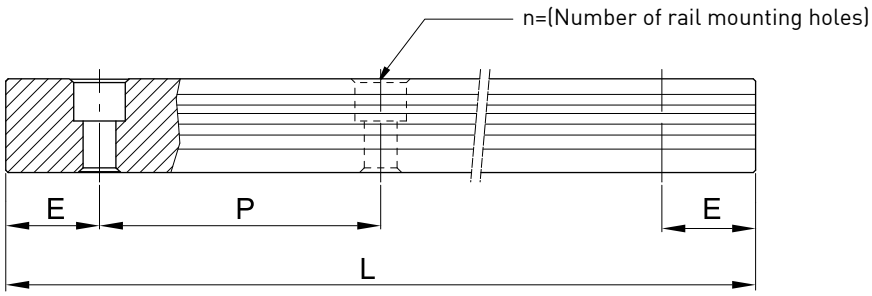

$$L = (n-1) \times P + 2 \times E \quad \text{Eq.2.1}$$

L : Total length of rail (mm)
n : Number of mounting holes
P : Distance between any two holes (mm)
E : Distance from the center of the last hole to the edge (mm)

Table 2-12-14 **Rail Standard Length and Max. Length**

unit: mm

Item	AG20	AG25	AG30
Standard Length L(n)	220(4)	220(4)	280(4)
	280(5)	280(5)	440(6)
	340(6)	340(6)	600(8)
	460(8)	460(8)	760(10)
	640(11)	640(11)	1,000(13)
	820(14)	820(14)	
	1,000(17)	1,000(17)	
Pitch (P)	60	60	80
Distance to End (E_s)	20	20	20
Max. Standard Length	1,180(19)	1,180(19)	1,180(19)
Max. Length	1,200	1,200	1,200

Note : 1. Tolerance of E value for standard rail is 0.5~-0.5 mm. Tolerance of E value for jointed rail is 0~-0.3 mm.
2. Maximum standard length means the max. rail length with standard E value on both sides.
3. If different E value is needed, please contact HIWIN.
4. AG20/25 of stainless steel is supplied with the maximum length of 1200mm.

2-12-12 Dimensions for AG Series

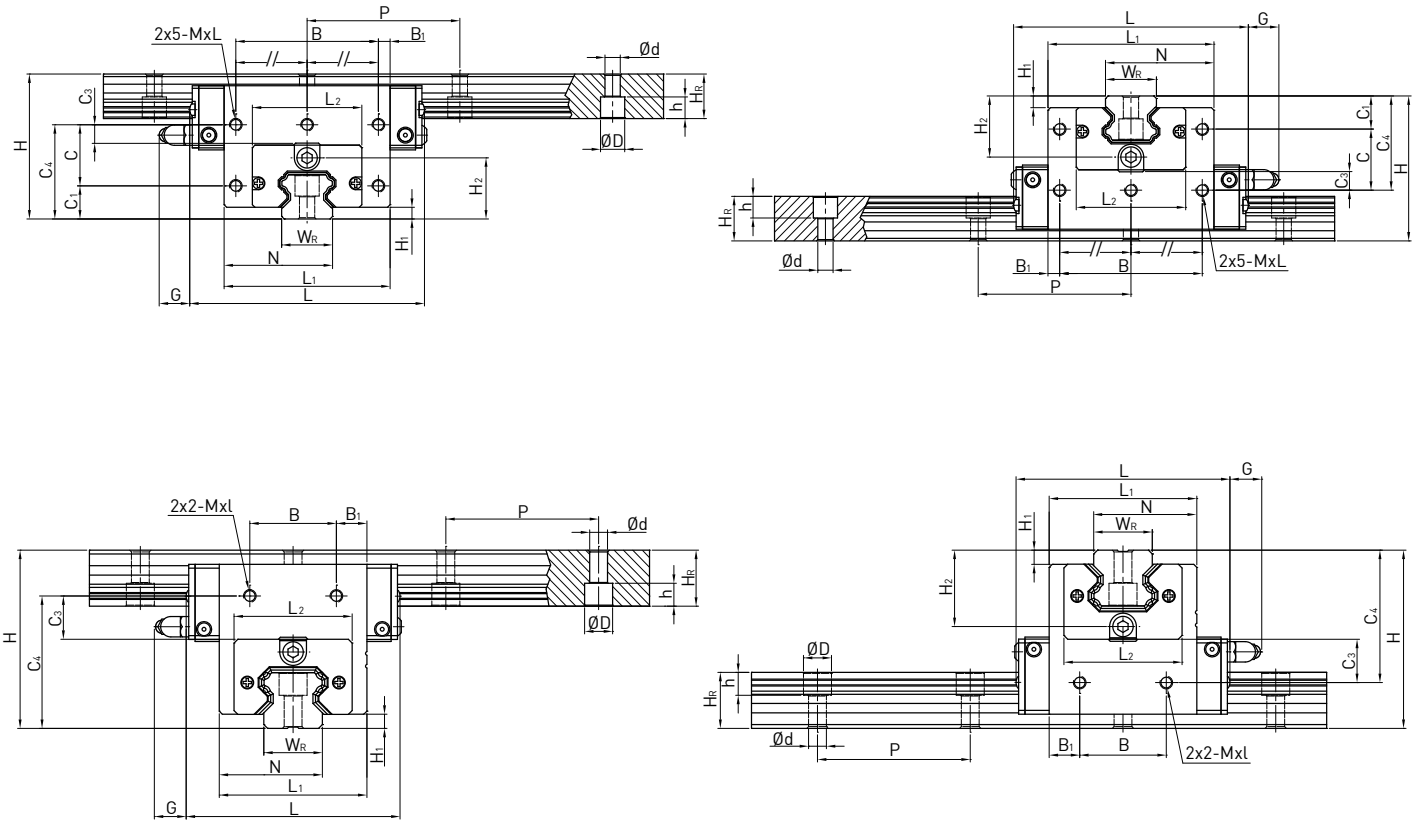

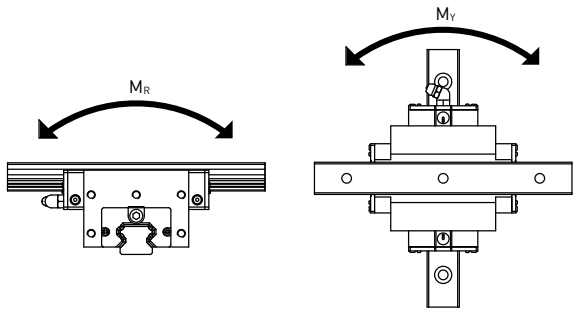

Model No.	Dimensions of Assembly (mm)			Dimensions of Block (mm)														Dimensions of Rail (mm)						Basic Dynamic Load Rating	Basic Static Load Rating	Static Rated Moment	
	H	H_1	N	L	L_1	L_2	K_1	K_2	B	B_1	C	C_1	C_3	C_4	M x l	H_2	G	W_R	H_R	D	h	d	P	C [kN]	C_0 [kN]	M_R kN-m	M_Y kN-m
AG20H	57	4.6	42.6	92.2	65.2	43	5	6	56	4.6	24	13	7.2	37	M5x8	24	12	20	17.5	9.5	8.5	6	60	32.7	47.96	0.35	0.35
AG25C	70	5.5	40.5	84	58	46.4	4.2	6	34	12	-	-	16.2	52	M6x10	30	12	23	22	11	9	7	60	34.9	52.82	0.42	0.33
AG25H			50.8	104.6	78.6				64	7.3	26	18	8.2	44										42.2	69.07	0.56	0.57
AG30C	82	6	49	97.4	70	58	5.25	6	40	15	-	-	19.2	61	M6x10	58	12	28	26	14	12	9	80	48.5	71.87	0.66	0.53
AG30H			60.5	120.4	93				76	8.5	32	21	11.2	53										58.6	93.99	0.88	0.92

Note: 1 kgf = 9.81 N

E2 Type

Self Lubrication Kit

2-13 E2 Type - Self lubrication Kit for Linear Guideway

2-13-1 Construction of E2 Type

E2 self-lubricating linear guideway contains a lubricator between the end cap and end seal. Outside of the block is equipped with a replaceable oil cartridge, the configuration of which is listed below.

Lubrication oil flows from the replaceable oil cartridge to the lubricator and then lubricates grooves of rails. The Oil cartridge comprises a oil conductor with 3D structure that enables the lubricator to contact oil despite that blocks are placed at a random position , and thus the lubrication oil inside the oil cartridge can be used up via capillary action.

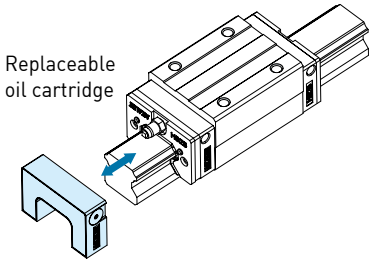

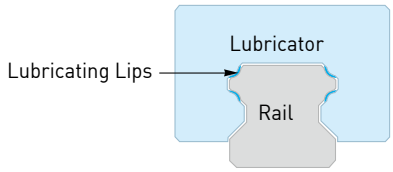

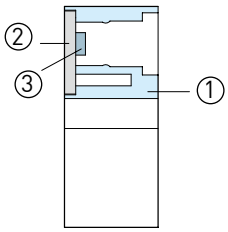

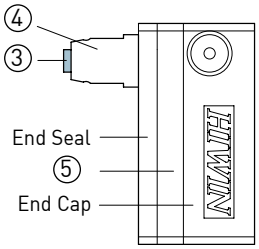

Configuration of the self-lubricant acessory

- 1. Oil cartridge
- 2. Cartridge cover
- 3. Oil conductor
- 4. Connector
- 5. Lubricator

2-13-2 Feature of E2 Type

(1) Cost reduction: Save costs by reducing oil usage and maintenance.

Table 2-13-1

Item	Standard Block	E2 (Self-lubricant) Block
Lubricant device	$ XXX	-
Design and installation of lubricant device	$ XXX	-
Cost of oil purchase	0.3cc / hr x 8hrs / day x 280 days / year x 5 year = 3360 cc x cost / cc = $ XXX	10 cc(5 years10000km) x cost/cc = $ XX
Cost of refillin	3~5hrs / time x 3~5times / year x 5year x cost / time = $ XXX	-
Waste oil disposal	3~5 times / year x 5year x cost / time = $ XXX	-

(2) Clean and environmentally friendly: Optimized oil usage prevents leaking, making it the ideal solution for clean working environments.
(3) Long lasting and low maintenance: Self-lubricating block is maintenance free in most applications.
(4) No installation limitations: The linear guideway can be lubricated by E2 self-lubricating module irrespective of mounting directions.
(5) Easy to be assembled and disassembled: The cartridge can be added or removed from the block even when the guideway is installed on a machine.
(6) Different oils can be selected: The replaceable oil cartridge can be refilled with any approved lubrication oil depending on different requirements.
(7) Applications for special environments: Sealing grease into the block leads to better lubrication effects, especially in dusty, dirty, or wet environments.

2-13-3 Applications

(1) Automation machinery
(2) Manufacturing Machines : Injection molding machines, printing, paper making, textile machines, food processing machines, wood working machines, and so on.
(3) Electronic Machinery : Semiconductor equipment, robotics, X-Y table, measuring and inspecting equipment.
(4) Others : Medical equipment, transporting equipment, construction equipment.

2-13-4 Specification

(1) Add "/ E2" after the specification of linear guideway
Ex. HGW25CC2R1600ZAPII + ZZ / E2

2-13-5 Lubrication Capability

(1) Life testing with light load

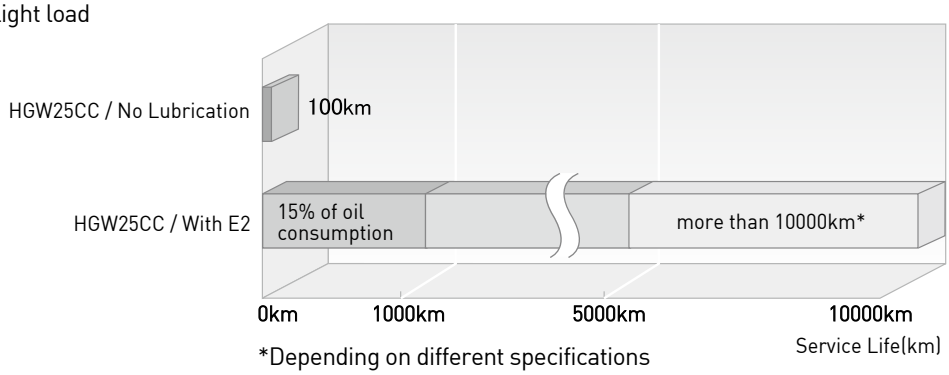

Table 2-13-2 **Test condition**

Model No.	HGW25CC
Speed	60m / min
Stroke	1500mm
Load	500kgf

(2) Characteristic of lubricating oil
The standard oil is a fully synthetic lubricant with a main constituent, synthetic hydrocarbons (PAO). The viscosity class of the oil is 680 (ISO VG680). Its characteristics are as follows.

- Compatible with lubrication grease of which the base oil is synthetic hydrocarbon oil, mineral oil or ester oil.
- Synthetic oil with superb high temperature thermal/oxidation resistance.
- High viscosity index to provide outstanding performance in service applications at extremely high and low temperatures.
- Low traction coefficient to reduce power consumption.
- Anti-corrosion and rust-proof.

* Lubricants with the same viscosity class can also be used; however, their compatibility should be taken into consideration.

2-13-6 Temperature Range for Application

Not for high heat environments exceeding 50°C and lower than -10°C. Please contact with HIWIN for further discussion and information if the temperature is out of this range.

E2 Type

Self Lubrication Kit

2-13-7 Dimension Table for E2 Type

(1) HG Series

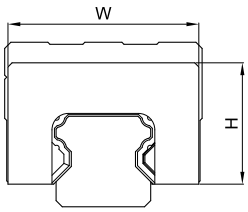

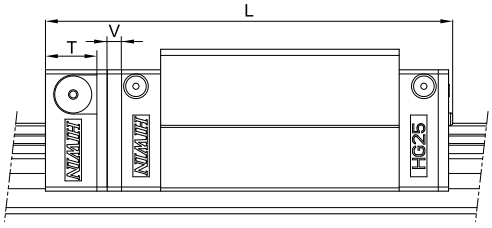

Model No.	E2 self-lubricating module dimensions							
	W	H	T	V	L			
					SS	ZZ	DD	KK
HG15C	32.4	19.5	12.5	3.0	75.4 (75.6)	82.5 (82.7)	82.0 (82.2)	89.1 (89.3)
HG20C	43.0	24.4	13.5	3.5	93.5 (94.4)	97.5 (98.5)	98.5 (99.4)	102.5 (103.5)
HG20H					108.2 (109.1)	112.2 (113.2)	113.2 (114.1)	117.2 (118.2)
HG25C	46.4	29.5	13.5	3.5	100.0 (100.5)	104.0 (105.0)	105.0 (105.5)	109.0 (110.0)
HG25H					120.6 (121.1)	124.6 (125.6)	125.6 (126.1)	129.6 (130.6)
HG30C	58.0	35.0	13.5	3.5	112.9 (113.9)	120.4 (121.4)	120.3 (121.3)	127.8 (128.8)
HG30H					135.9 (136.9)	143.4 (144.4)	143.3 (144.3)	150.8 (151.8)
HG35C	68.0	38.5	13.5	3.5	127.9 (128.9)	135.4 (136.4)	135.3 (136.3)	142.8 (143.8)
HG35H					153.7 (154.7)	161.2 (162.2)	161.1 (162.1)	168.6 (169.6)
HG45C	82.0	49.0	16.0	4.5	157.2 (157.2)	166.5 (166.5)	167.2 (167.2)	176.5 (176.5)
HG45H					189.0 (189.0)	198.3 (198.3)	199.0 (199.0)	208.3 (208.3)
HG55C	97.0	55.5	16.0	4.5	183.9 (183.9)	193.6 (193.6)	194.3 (194.3)	204.0 (204.0)
HG55H					222.0 (222.0)	231.7 (231.7)	232.4 (232.4)	242.1 (242.1)
HG65C	121.0	69.0	16.0	4.5	219.2 (219.2)	224.7 (224.7)	228.2 (228.2)	233.7 (233.7)
HG65H					278.6 (278.6)	284.1 (284.1)	287.6 (287.6)	293.1 (293.1)

Note : The marking of "( )" denotes the maximum block length with screws, lips of end seals, etc.

(2) EG Series

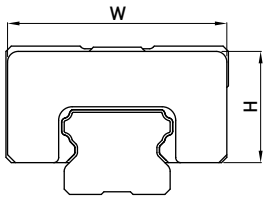

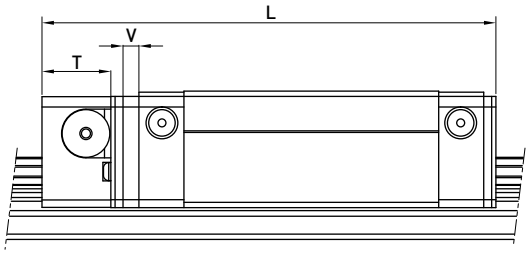

Model No.	E2 self-lubricating module dimensions							
	W	H	T	V	L			
					SS	ZZ	DD	KK
EG15S	33.3	18.7	11.5	3.0	54.6 (55.8)	56.2 (58.4)	58.6 (59.8)	60.2 (62.4)
EG15C					71.3 (72.5)	72.9 (75.1)	75.3 (76.5)	76.9 (79.1)
EG20S	41.3	20.9	13.0	3.0	66.0 (68.0)	67.6 (70.6)	70.0 (72.0)	71.6 (74.6)
EG20C					85.1 (87.1)	86.7 (89.7)	89.1 (91.1)	90.7 (93.7)
EG25S	47.3	24.9	13.0	3.0	75.1 (77.1)	77.1 (80.1)	79.1 (81.1)	81.1 (84.1)
EG25C					98.6 (100.6)	100.6 (103.6)	102.6 (104.6)	104.6 (107.6)
EG30S	59.3	31.0	13.0	3.0	85.5 (87.5)	87.5 (90.5)	89.5 (91.5)	91.5 (94.5)
EG30C					114.1 (116.1)	116.1 (119.1)	118.1 (120.1)	120.1 (123.1)
EG35S	68.0	33.5	13.0	3.0	91.0 (93.0)	94.0 (97.0)	95.0 (97.0)	98.0 (101.0)
EG35C					124.0 (126.0)	127.0 (130.0)	128.0 (130.0)	131.0 (134.0)

Note : The marking of "( )" denotes the maximum block length with screws, lips of end seals, etc.

(3) RG Series

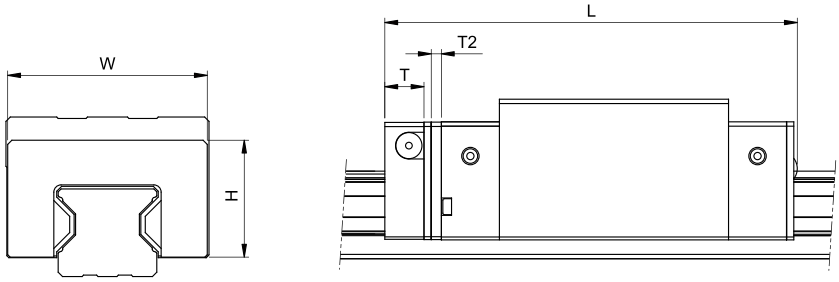

Model No.	E2 self-lubricating module dimensions							
	W	H	T	V	L			
					SS	ZZ	DD	KK
RG15C	33.0	19.2	12.5	3.5	84.0 (85.2)	86.0 (88.2)	88.4 (89.6)	90.4 (92.6)
RG20C	43.4	24.2	12.5	3.5	102 (103.2)	104.0 (106.2)	106.4 (107.6)	108.4 (110.6)
RG20H					122 (123.2)	124.0 (126.2)	126.4 (127.6)	128.4 (130.6)
RG25C	46.8	29.2	13.5	3.5	114.9 (116.7)	116.9 (119.9)	119.3 (121.1)	121.3 (124.3)
RG25H					131.4 (133.2)	133.4 (136.4)	135.8 (137.6)	137.8 (140.8)
RG30C	58.8	34.9	13.5	3.5	126.8 (128.6)	129.8 (132.8)	131.6 (133.4)	134.6 (137.6)
RG30H					148.8 (150.6)	151.8 (154.8)	153.6 (155.4)	156.6 (159.6)
RG35C	68.8	40.3	13.5	3.5	141 (143.7)	144.0 (148.0)	146.0 (148.7)	149.0 (153.0)
RG35H					168.5 (171.2)	171.5 (175.5)	173.5 (176.2)	176.5 (180.5)
RG45C	83.8	50.2	16.0	4.5	173.7 (175.3)	176.7 (180.7)	180.9 (182.5)	183.9 (187.9)
RG45H					207.5 (209.1)	210.5 (214.5)	214.7 (216.3)	217.7 (221.7)
RG55C	97.6	58.4	16.0	4.5	204.2 (205.8)	207.2 (211.2)	211.4 (213)	214.4 (218.4)
RG55H					252.5 (254.1)	255.5 (259.5)	259.7 (261.3)	262.7 (266.7)
RG65C	121.7	76.1	16.0	4.5	252.5 (254.5)	255.5 (260.5)	261.3 (263.3)	264.3 (269.3)
RG65H					315.5 (317.5)	318.5 (323.5)	324.3 (326.3)	327.3 (332.3)

Note : The marking of "( )" denotes the maximum block length with screws, lips of end seals, etc.

(4) QH Series

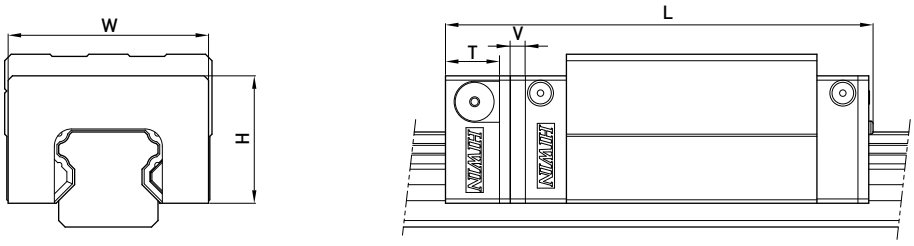

Model No.	E2 self-lubricating module dimensions							
	W	H	T	V	L			
					SS	ZZ	DD	KK
QH15C	32.4	19.5	12.5	3.0	75.4 (75.6)	82.2 (82.7)	82.0 (82.2)	88.8 (89.3)
QH20C	43.0	24.4	13.5	3.5	93.1 (94.2)	97.2 (98.5)	98.1 (99.2)	102.2 (103.5)
QH20H					107.8 (108.9)	111.9 (113.2)	112.8 (113.9)	116.9 (118.2)
QH25C	46.4	29.5	13.5	3.5	100.2 (101.5)	104.7 (106.0)	105.2 (106.5)	109.7 (111.0)
QH25H					120.8 (122.1)	125.3 (126.6)	125.8 (127.1)	130.3 (131.6)
QH30C	58.0	35.0	13.5	3.5	112.9 (113.9)	120.1 (121.4)	120.3 (121.3)	127.5 (128.8)
QH30H					135.9 (136.9)	143.1 (144.4)	143.3 (144.3)	150.5 (151.8)
QH35C	68.0	38.5	16.0	3.5	129.3 (129.7)	133.5 (134.0)	134.3 (134.7)	138.5 (139.0)
QH35H					155.1 (155.5)	159.3 (159.8)	160.1 (160.5)	164.3 (164.8)
QH45C	82.0	49.0	16.0	4.5	158.3 (158.3)	163.7 (163.7)	165.5 (165.5)	170.9 (170.9)
QH45H					190.1 (190.1)	195.5 (195.5)	197.3 (197.3)	202.7 (202.7)

Note : The marking of "( )" denotes the maximum block length with screws, lips of end seals, etc.

E2 Type

Self Lubrication Kit

(5) QR Series

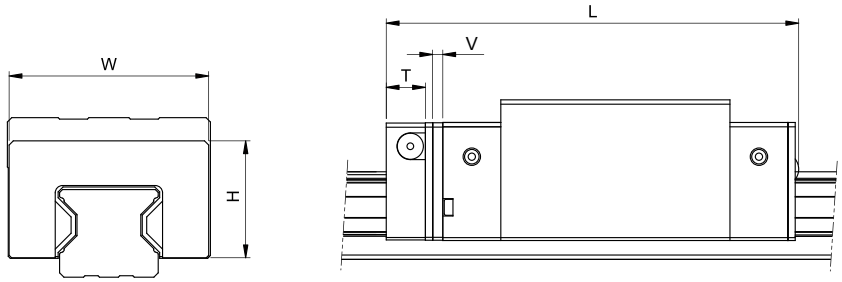

Model No.	E2 self-lubricating module dimensions							
	W	H	T	V	L			
					SS	ZZ	DD	KK
QR 20C	43.4	24.2	12.5	3.5	102.0 (103.2)	104.0 (106.2)	106.4 (107.4)	108.4 (110.6)
QR 25C	46.8	29.2	13.5	3.5	114.9 (116.7)	116.9 (119.9)	119.3 (121.1)	121.3 (124.3)
QR 25H					129.9 (131.7)	131.9 (134.9)	134.3 (136.1)	136.3 (139.3)
QR 30C	58.8	34.9	13.5	3.5	126.8 (128.6)	129.8 (132.8)	131.6 (133.4)	134.6 (137.6)
QR 30H					148.8 (150.6)	151.5 (154.8)	153.6 (155.4)	156.6 (159.6)
QR 35C	68.8	40.3	13.5	3.5	141.0 (143.7)	144.0 (148.0)	146.0 (148.7)	149.0 (153.0)
QR 35H					168.5 (171.2)	171.5 (175.5)	173.5 (176.2)	176.5 (180.5)
QR 45C	83.8	50.2	16.0	4.5	173.7 (175.3)	176.7 (180.7)	180.9 (182.5)	183.9 (187.9)
QR 45H					207.5 (209.1)	210.5 (214.5)	214.7 (216.3)	217.7 (221.7)

Note : The marking of "( )" denotes the maximum block length with screws, lips of end seals, etc.

(6) QE Series

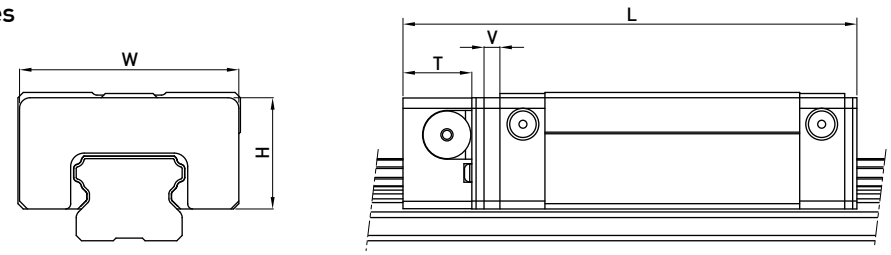

Model No.	E2 self-lubricating module dimensions							
	W	H	T	V	L			
					SS	ZZ	DD	KK
QE15S	33.3	19.2	11.5	3.0	54.6 (56.0)	56.6 (58.8)	58.6 (60.0)	60.6 (62.8)
QE15C					71.3 (72.7)	73.3 (75.5)	75.3 (76.7)	77.3 (79.5)
QE20S	41.3	20.9	13.0	3.0	66.0 (68.0)	68.0 (71.0)	70.0 (72.0)	72.0 (75.0)
QE20C					85.1 (87.1)	87.1 (90.1)	89.1 (91.1)	91.1 (94.1)
QE25S	47.3	24.9	13.0	3.0	76.1 (77.8)	78.1 (81.1)	81.1 (82.8)	83.1 (86.1)
QE25C					99.6 (101.3)	101.6 (104.6)	104.6 (106.3)	106.6 (109.6)
QE30S	59.3	31.0	13.0	3.0	83.5 (85.4)	85.5 (88.5)	88.5 (90.4)	90.5 (93.5)
QE30C					112.1 (114.0)	114.1 (117.1)	117.1 (119.0)	119.1 (122.1)
QE35S	68.0	35.5	13.0	3.0	92.0 (94.0)	95.0 (98.0)	96.0 (98.0)	99.0 (102.0)
QE35C					124.0 (126.0)	127.0 (130.0)	128.0 (130.0)	131.0 (134.0)

Note : The marking of "( )" denotes the maximum block length with screws, lips of end seals, etc.

2-14 PG Type - Positioning Guideway

(1) Construction

The PG is a linear guideway assembly integrated with a magnetic encoder for position measurement.

(2) Features

1. Magnetic encoder is built into the rail, saving installation space.
2. Maintains high rigidity as well as high accuracy.
3. Both the sensor and the magnetic strip are protected from harmful external contaminants such as dust, iron chips, etc.
4. Non-contact measuring sensor for longer life.
5. Can measure distances up to 30 m.
6. Can withstand humidity and high-temperature environments, along with oily, dusty and high vibration applications.
7. High resolution
8. Easy installation

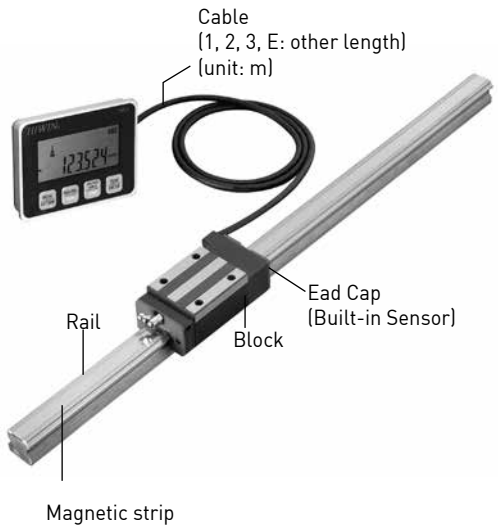

2-14-1 Model Number of PG Type

PGH W 25 C A E 1/2 T 1600 E ZA P I / II / E2 + KK + 03 + Position measuring module

- Positioning Guideway Series : PGH
- Block Type : W : Flange Type; H : Square Type; L : Square Type (Low)
- Model Size : 20, 25, 30, 35, 45, 55
- Load Type : C : Heavy Load; H : Super Heavy Load
- Block Mounting Type : A : From Top; B : From Bottom; C : Top or Bottom
- E : Special Block; None : Standard Block
- Total No. of Blocks with Sensor for per rail
- No. of Blocks per rail
- Rail Mounting Type : R : From Top; T : From Bottom[1]
- Rail Length (mm)
- E : Special Rail; None : Standard Rail
- Preload Code : Z0, ZA, ZB
- Precision Code : C, H, P, SP, UP
- No. of Rails with Magnetic Strip
- No. of Rails per Axis
- E2 : Self Lubricant Block; Blank: Standard Block
- Dustproof : DD, ZZ, KK
- Cable Length : 01=1m; 02=2m; 03=3m; 10=10m
- Position measuring module

Continued in next page (P.218)

PG Type

Positioning Guideway

Position measuring module (Continued from last page, P.217)

+S +A 1 1 +S32

Sensor
S: Standard Type (Pole pitch: 5mm, Analog signal)
A: External A Type (Pole pitch: 1mm, Analog signal)(2)
D: External D Type (Pole pitch: 1mm, Digital signal)(2)

Signal translator
A: Signal translator A (Pole pitch: 5mm)

Resolution of signal translator
1 : 5μm 2 : 10μm

Output signal of signal translator
1 : 5V RS422 / TTL
2 : 24V / Open collector

Display
LD: LCD display
H10: High efficiency single axis display H1
H11: High efficiency single axis display H1
(RS-232 output is included)
S32: Multi-axis display S3 (2 axis display)
S33: Multi-axis display S3 (3 axis display)
S42: High efficiency multi-axis display S4 (2 axis display)
S43: High efficiency multi-axis display S4 (3 axis display)

Note: (1) If rail mounting configuration is from bottom, magnetic strip will be affixed on the rail.
(2) External type sensors (A and D) are only available for size 20 and 25.

Table 2-14-1 **The help of selecting the components for the position measuring module.**

Sensor	Signal translator	Resolution of signal translator	Output signal of signal translator	Display
S: Standard Type (Pole pitch: 5mm, Analog signal)	A: Signal translator A (Pole pitch: 5mm)	1:5μm 2:10μm	1:5V RS422/TTL 2:24V/Open collector	S32: Multi-axis display S3 (2 axis display)
				S33: Multi-axis display S3 (3 axis display)
				S42: High efficiency multi-axis display S4 (2 axis display)
				S43: High efficiency multi-axis display S4 (3 axis display)
	Does not need a signal translator			LD: LCD display
				H10: High efficiency single axis display H1
				H11: High efficiency single axis display H1 (RS-232 output is included)
A: External A Type (Pole pitch: 1mm, Analog signal) (Only available for size 20 and 25)	Does not need a signal translator			H10: High efficiency single axis display H1
				H11: High efficiency single axis display H1 (RS-232 output is included)
D: External D Type (Pole pitch: 1mm, Digital signal) (Only available for size 20 and 25)	Does not need a signal translator			H10: High efficiency single axis display H1
				H11: High efficiency single axis display H1 (RS-232 output is included)
				S32: Multi-axis display S3 (2 axis display
				S33: Multi-axis display S3 (3 axis display)
				S42: High efficiency multi-axis display S4 (2 axis display)
				S43: High efficiency multi-axis display S4 (3 axis display)

2-14-2 Technical data for PG Type

(1) Sensor technical data

Table 2-14-2 **Technical data for the sensor**

Type / Specification	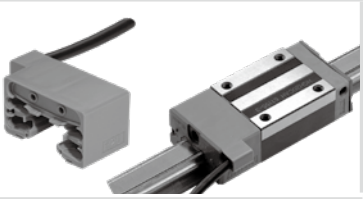		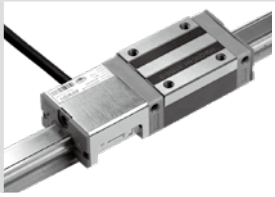
	Standard	External	
		A type (analog signal)	D type (digital signal)
Resolution	5mm	1mm	1mm
Repeatability	±10 μm [1]	±3 μm [2]	±2 μm [2]
Reference signal	-	1mm/pulse	1mm/pulse
Max. speed	10m/sec	10m/sec	5m/sec
Output signal	SIN/COS 50mVp-p	SIN/COS 1Vp-p	5V RS422/TTL
Max. output frequency	2KHz	10KHz	1.25MHz
Input power	3.3VDC±5%	5VDC±5%	5VDC±5%
Input current	0.1A	0.1A	0.1A
Operating temperature	0˚C~50˚C	0˚C~50˚C	0˚C~50˚C
Storage temperature	-5˚C~70˚C	-5˚C~70˚C	-5˚C~70˚C
IP class	IP67	IP67	IP67

Note : (1) Repeatability is measured at a gap of 1mm.
(2) Repeatability is measured at a gap of 0.1mm.

- **Dimensions for the external type sensor**

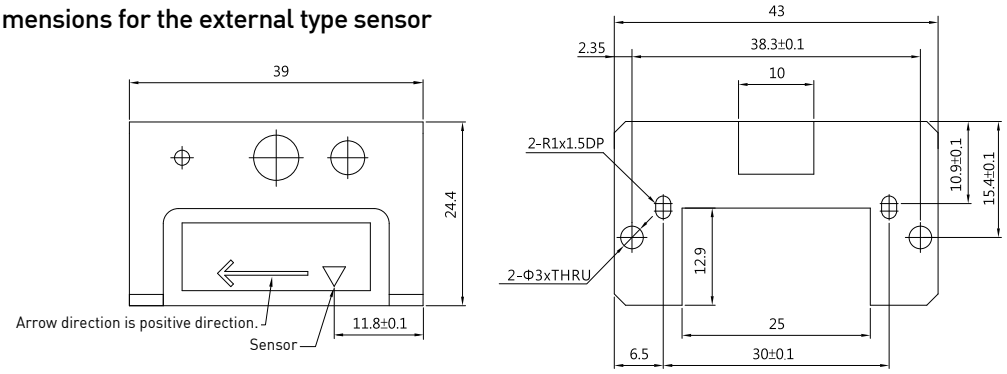

Note:These dimensions are suitable for HIWIN PG20 linear guideway.

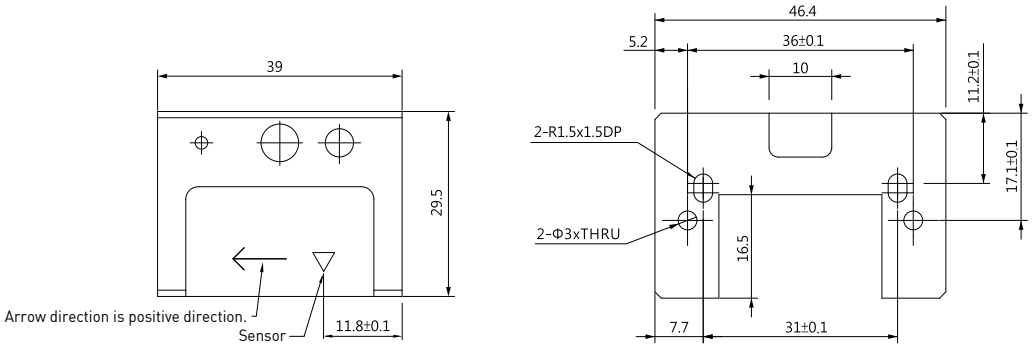

Note:These dimensions are suitable for HIWIN PG25 linear guideway.

PG Type

Positioning Guideway

(2) Signal translator technical data

Table 2-14-3 **Technical data for the signal translator**

Type / Specification				
	Signal translator A			
Output signal	5V RS422 / TTL		24V/Open collector	
Resolution	5 μm	10 μm	5 μm	10 μm
Repeatability	±10 μm	±20 μm	±10 μm	±20 μm
Max. output frequency	64KHz	32KHz	64KHz	32KHz
Accuracy	±[80 μm+15 μm/m×L] , L: Scale Length (m)			
Max. speed	1.5m/sec			
Input signal	SIN/COS 50mVp-p			
Input power	5VDC±5% / 24VDC±10%			
Input current	0.5A			
Operating temperature	0°C ~ 50°C			
Storage temperature	-5°C ~ 70°C			
IP class	IP43			

Dimensions of signal translator A

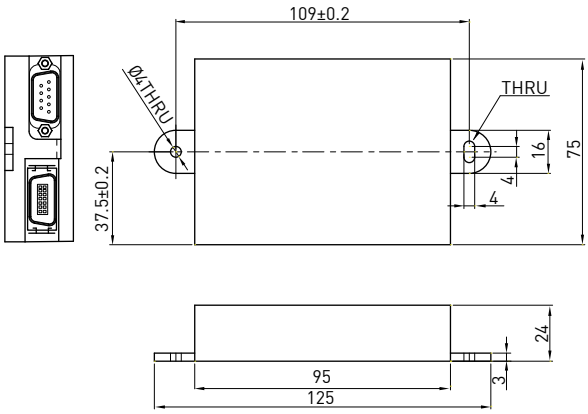

(3) Display technical data

Table 2-14-4 **Technical data for the single axis diplay**

Type / Specification		
	LCD display, LD	High efficiency single axis display, H1
Display	8 digital LCD display with +/- sign	8 digital LED display
Resolution	5μm	1μm,2μm,5μm,10μm
Accuracy	±[80μm+15μm/m×L] L: Scale Length (m)	-
Repeatability	±10μm	-
Max. speed	3m/sec	-
Max. acceleration	2G	2G
Input signal	Analog:SIN/COS 50mVp-p	Analog:SIN/COS 1Vp-p Digital:5V RS422/TTL
Input frequency	0.6KHz	Analog:2KHz Digital:0.5MHz
Input power	Two commercial AA No.3 batteries	5VDC±5%
Input current	-	1A
Relay contact rating	-	DC24V/2A
Battery life	1 year by setting it at 1. 5m/s	-
Operating temperature	0˚C ~ 50˚C	0˚C ~ 50˚C
Storage temperature	-5˚C ~ 70˚C	-5˚C ~ 70˚C
IP class	IP43	IP43

Table 2-14-5 **Technical data for the multi-axis display**

Type / Specification		
	Multi-axis display, S3	High efficiency multi-axis display, S4
Display	8 digital LED display	8 digital LED display
Resolution	0.1μm, 0.2μm, 0.5μm, 1μm, 2μm, 5μm, 10μm, 20μm, 50μm	0.1μm, 0.2μm, 0.5μm, 1μm, 2μm, 5μm, 10μm, 20μm, 50μm
Input signal	5V/TTL	5V/TTL
Max. output frequency	<1.5MHz	<2MHz
Input power	DC 8V~30V	AC 90V~240V
Input current	0.08A	-
Operating temperature	0˚C~50˚C	0˚C~50˚C
Storage temperature	-5˚C~70˚C	-5˚C~70˚C
IP class	IP43	IP43

Note: An additional signal transfer cable is needed when one of the displays (S3, S4) is selected. The type of cable will be selected by HIWIN depending on the type of display.

PG Type

Positioning Guideway

- Dimensions of LCD display, LD

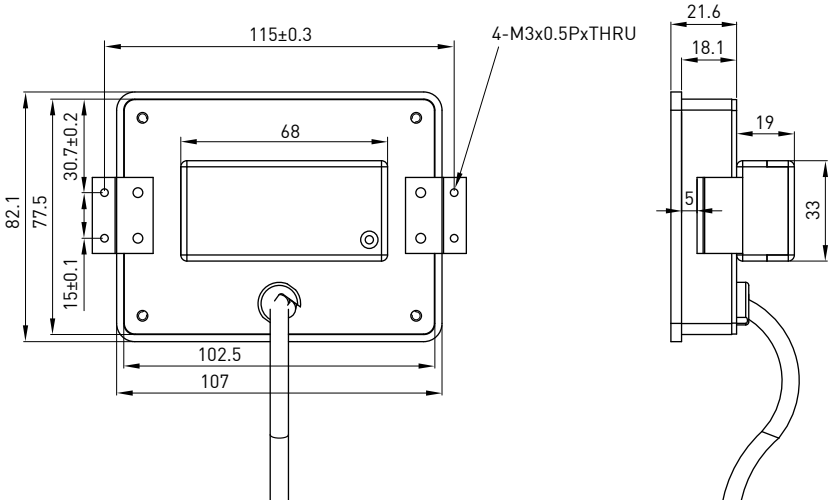

- Dimensions of high efficiency single axis display, H1

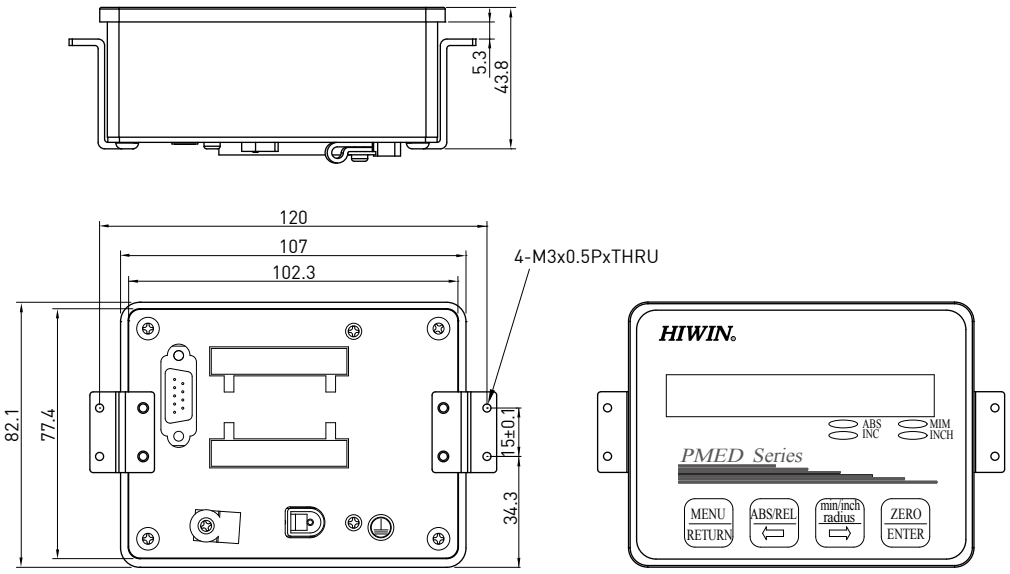

Pin assignment of high efficiency single axis display, H1

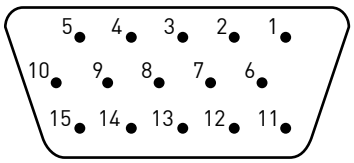

Pin definition for signal input connector

Pin	Designation	Pin	Designation	Pin	Designation
1	+5V	6	FG	11	A+(Analog)
2	GND	7	Z+	12	A-(Analog)
3	A+(Digital)	8	Z-	13	B+(Analog)
4	B+(Digital)	9	A-(Digital)	14	B-(Analog)
5	NC	10	B-(Digital)	15	NC

Pin definition for signal output connector

I/O 1		I/O 2	
Pin	Designation	Pin	Designation
1	NC	1	NC
2		2	
3	NC	3	NC
4		4	
5	Relay 0(CH-0)	5	Relay 2(CH-2)
6		6	
7	Relay 1(CH-1)	7	Relay 3(CH-3)
8		8	

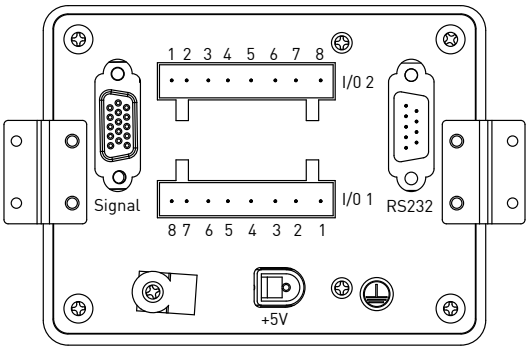

Dimensions of multi-axis display, S3

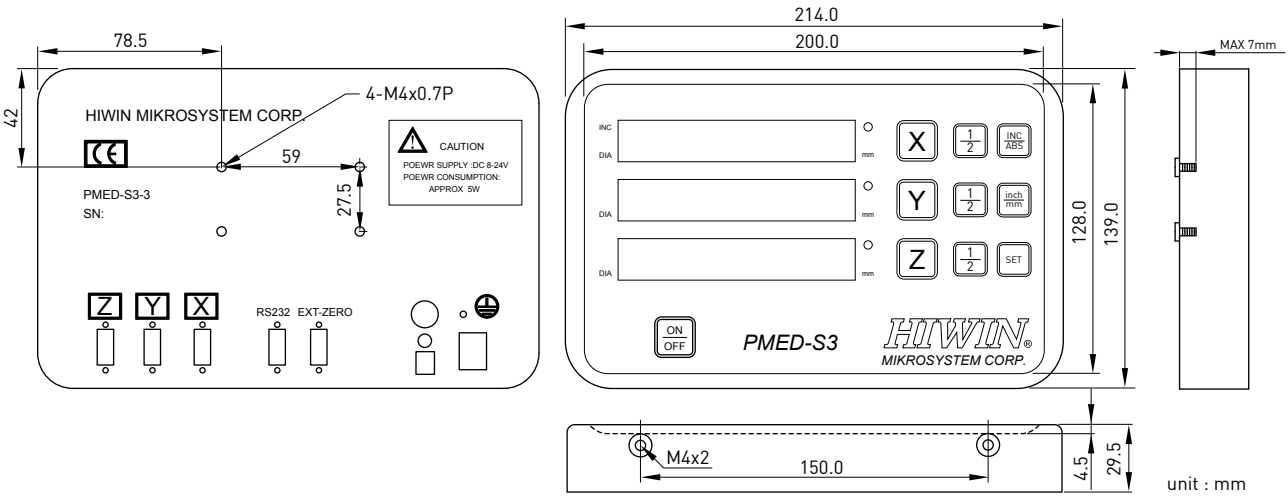

PG Type

Positioning Guideway

Pin assignment of multi-axis display, S3

15 pin D-Sub signal (female)

NC : No connection
FG : Frame ground

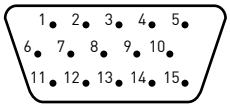

Pin	Designation	Pin	Designation	Pin	Designation
1	+5V	6	FG	11	NC
2	GND	7	NC	12	NC
3	A+	8	NC	13	NC
4	B+	9	NC	14	NC
5	ABS-	10	NC	15	NC

Dimensions of high efficiency multi-axis display, S4

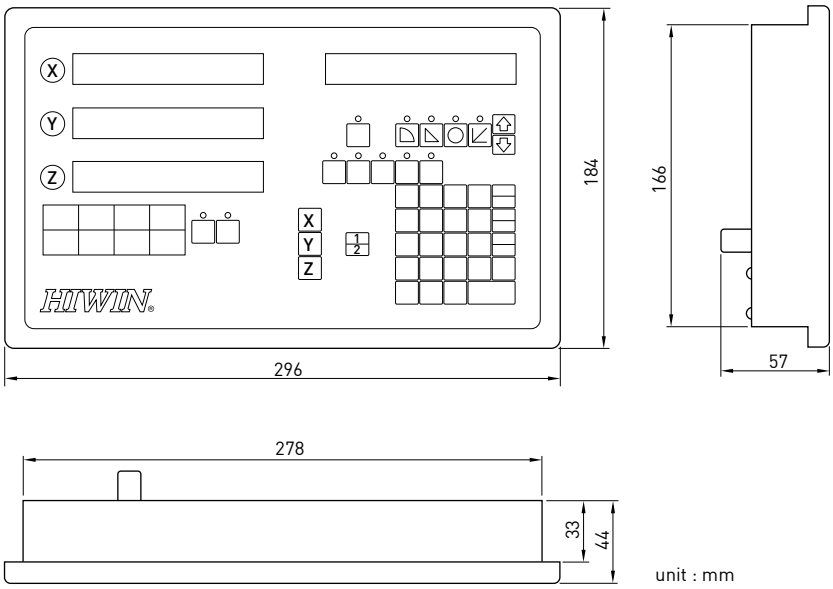

Pin assignment of high efficiency multi-axis display, S4

15 pin D-Sub signal (female)

NC : No connection
FG : Frame ground

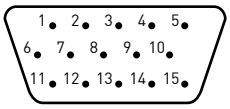

Pin	Designation	Pin	Designation	Pin	Designation
1	+5V	6	FG	11	NC
2	GND	7	NC	12	NC
3	A+	8	NC	13	NC
4	B+	9	NC	14	NC
5	ABS-	10	NC	15	NC

2-14-3 Accuracy Classes

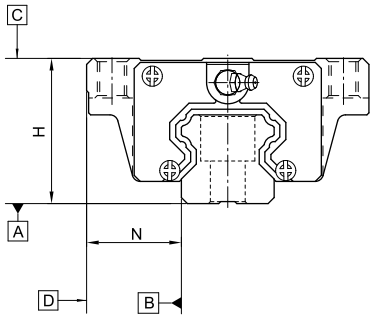

Table 2-14-6 **Accuracy Standards of PGH 25, 30, 35**

Unit: mm

Accuracy classes	Normal (C)	High (H)	Precision (P)	Super Precision (SP)	Ultra Precision (UP)
Dimensional tolerance of height H	± 0.1	± 0.04	0 - 0.04	0 - 0.02	0 - 0.01
Dimensional tolerance of width N	± 0.1	± 0.04	0 - 0.04	0 - 0.02	0 - 0.01
Variation of height H	0.02	0.015	0.007	0.005	0.003
Variation of width N	0.03	0.015	0.007	0.005	0.003
Running parallelism of block surface C to surface A	See table 2-13-7				
Running parallelism of block surface D to surface B	See table 2-13-7				

Note: See table 2-1-3 and 2-1-5 in section 2-1(HG series) for the accuracy standards of PGH 20, 45, 55

Table 2-14-7 **Accuracy of Running Parallelism**

Rail length (mm)	Accuracy (μm) C	H	P	SP	UP
~ 100	12	7	3	2	2
100 ~ 200	14	9	4	2	2
200 ~ 300	15	10	5	3	2
300 ~ 500	17	12	6	3	2
500 ~ 700	20	13	7	4	2
700 ~ 900	22	15	8	5	3
900 ~ 1,100	24	16	9	6	3
1,100 ~ 1,500	26	18	11	7	4
1,500 ~ 1,900	28	20	13	8	4
1,900 ~ 2,500	31	22	15	10	5
2,500 ~ 3,100	33	25	18	11	6
3,100 ~ 3,600	36	27	20	14	7
3,600 ~ 4,000	37	28	21	15	7

2-14-4 Preload

Table 2-14-8 **PGH-series**

Class	Code	Preload
Light Preload	Z0	0~0.02C
Medium Preload	ZA	0.05C~0.07C
Heavy Preload	ZB	0.10C~0.12C

Note: "C" in preload column means basic dynamic load rating

PG Type

Positioning Guideway

2-14-5 Dimensions for PG Series

(1) PGHH-CA / PGHH-HA

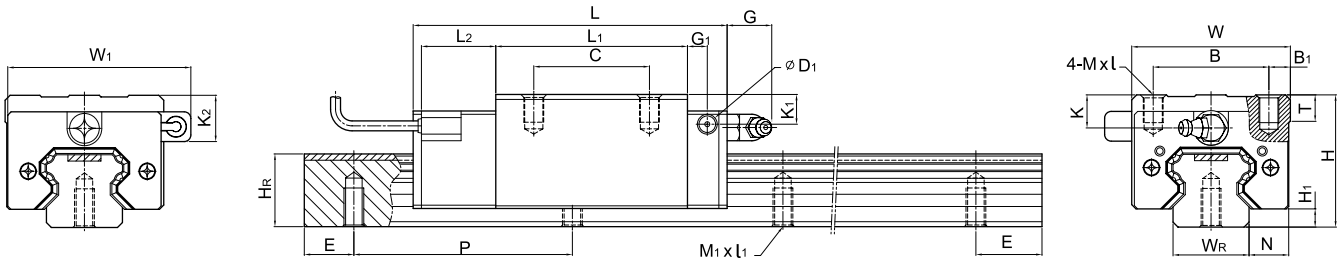

Model No.	Dimensions of Assembly (mm)			Dimensions of Block (mm)															Dimensions of Rail (mm)					Basic Dynamic Load Rating	Basic Static Load Rating	Weight	
																										Block	Rail
	H	H_1	N	W	W_1	B	B_1	C	L	L_1	L_2	G	G_1	D_1	K	K_1	K_2	Mxl	T	W_R	H_R	M_1xl_1	P	E	C(kN)	C_0 (kN)	kg	kg/m
PGHH20CA	30	4.6	12	44	52	32	6	36	90.5	50.5	25	12	6	5	6	6	10	M5x6	8	20	17.5	M6x10	60	20	27.1	36.68	0.38	2.05
PGHH20HA								50	105.2	65.2															32.7	47.96	0.39	
PGHH25CA	40	5.5	12.5	48	55.4	35	6.5	35	95	58	22.5	12	6	5	10	9	14	M6x8	8	23	22	M6x12	60	20	34.9	52.82	0.51	3.05
PGHH25HA								50	116	78.6															42.2	69.07	0.69	
PGHH30CA	45	6	16	60	67	40	10	40	110	70	23	12	6	5	9.5	13.8	19	M8x10	8.5	28	26	M8x15	80	20	48.5	71.87	0.88	4.31
PGHH30HA								60	133	93															58.6	93.99	1.16	
PGHH35CA	55	7.5	18	70	77	50	10	50	123	80	23.4	12	7	5	16	19.6	23.5	M8x12	10.2	34	29	M8x17	80	20	64.6	93.88	1.45	6.14
PGHH35HA								72	148.8	105.8															77.9	122.77	1.92	
PGHH45CA	70	9.5	20.5	86	91	60	13	60	148	97	24.5	12.9	10	8.5	18.5	30.5	30.5	M10x17	16	45	38	M12x24	105	22.5	103.8	146.71	2.73	10.25
PGHH45HA								80	179.8	128.8															125.3	191.85	3.61	
PGHH55CA	80	13	23.5	100	106	75	12.5	75	172.7	117.7	26	12.9	11	8.5	22	29	28.5	M12x18	17.5	53	44	M14x25	120	30	153.2	211.23	4.17	14.92
PGHH55HA								95	210.8	155.8															184.9	276.23	5.49	

Note: 1 kgf = 9.81N

(2) PGHW-CA / PGHW-HA

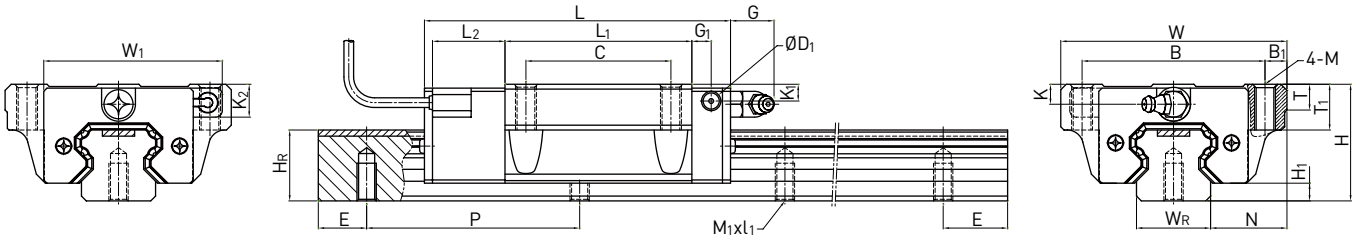

Model No.	Dimensions of Assembly (mm)			Dimensions of Block (mm)																Dimensions of Rail (mm)					Basic Dynamic Load Rating	Basic Static Load Rating	Weight	
																											Block	Rail
	H	H_1	N	W	W_1	B	B_1	C	L	L_1	L_2	G	G_1	D_1	M	K	K_1	K_2	T	T_1	W_R	H_R	M_1xl_1	P	E	C(kN)	C_0 (kN)	kg	kg/m
PGHW20CA	30	4.6	21.5	63	52	53	5	40	90.5	50.5	25	12	6	5	M6	6	6	10	8	10	20	17.5	M6x10	60	20	27.1	36.68	0.40	2.05
PGHW20HA									105.2	65.2																32.7	47.96	0.52	
PGHW25CA	36	5.5	23.5	70	55.4	57	6.5	45	95	58	22.5	12	6	5	M8	6	5	10	8	14	23	22	M6x12	60	20	34.9	52.82	0.59	3.05
PGHW25HA									116	78.6																42.2	69.07	0.80	
PGHW30CA	42	6	31	90	67	72	9	52	110	70	23	12	6	5	M10	6.5	10.8	16	8.5	16	28	26	M8x15	80	20	48.5	71.87	1.09	4.31
PGHW30HA									133	93																58.6	93.99	1.44	
PGHW35CA	48	7.5	33	100	77	82	9	62	123	80	23.4	12	7	5	M10	9	12.6	16.5	10.1	18	34	29	M8x17	80	20	64.6	93.88	1.56	6.14
PGHW35HA									148.8	105.8																77.9	122.77	2.06	
PGHW45CA	60	9.5	37.5	120	91	100	10	80	148	97	24.5	12.9	10	8.5	M12	8.5	20	20	15.1	22	45	38	M12x24	105	22.5	103.8	146.71	2.79	10.25
PGHW45HA									179.8	128.8																125.3	191.85	3.69	
PGHW55CA	70	13	43.5	140	106	116	12	95	172.7	117.7	26	12.9	11	8.5	M14	12	19	18.5	17.5	26.5	53	44	M14x25	120	30	153.2	211.23	4.52	14.92
PGHW55HA									210.8	155.8																184.9	276.23	5.96	

Note: 1 kgf = 9.81N

PG Type

Positioning Guideway

(3) PGHW-CB/ PGHW-HB

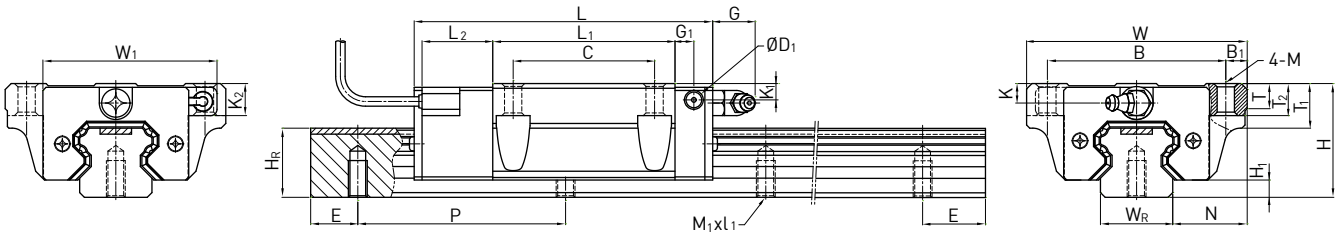

Model No.	Dimensions of Assembly (mm)			Dimensions of Block (mm)																		Dimensions of Rail (mm)					Basic Dynamic Load Rating	Basic Static Load Rating	Weight	
																													Block	Rail
	H	H_1	N	W	W_1	B	B_1	C	L	L_1	L_2	G	G_1	D_1	M	K	K_1	K_2	T	T_1	T_2	W_R	H_R	M_1xl_1	P	E	C(kN)	C_0 (kN)	kg	kg/m
PGHW20CB	30	4.6	21.5	63	52	53	5	40	90.5	50.5	25	12	6	5	Ø6	6	6	10	8	10	9.5	20	17.5	M6x10	60	20	27.1	36.68	0.40	2.05
PGHW20HB									105.2	65.2																	32.7	47.96	0.52	
PGHW25CB	36	5.5	23.5	70	55.4	57	6.5	45	95	58	22.5	12	6	5	Ø7	6	5	10	8	14	10	23	22	M6x12	60	20	34.9	52.82	0.59	3.05
PGHW25HB									116	78.6																	42.2	69.07	0.80	
PGHW30CB	42	6	31	90	67	72	9	52	110	70	23	12	6	5	Ø9	6.5	10.8	16	8.5	16	10	28	26	M8x15	80	20	48.5	71.87	1.09	4.31
PGHW30HB									133	93																	58.6	93.99	1.44	
PGHW35CB	48	7.5	33	100	77	82	9	62	123	80	23.4	12	7	5	Ø9	9	12.6	16.5	10.1	18	13	34	29	M8x17	80	20	64.6	93.88	1.56	6.14
PGHW35HB									148.8	105.8																	77.9	122.77	2.06	
PGHW45CB	60	9.5	37.5	120	91	100	10	80	148	97	24.5	12.9	10	8.5	Ø11	8.5	20	20	15.1	22	15	45	38	M12x24	105	22.5	103.8	146.71	2.79	10.25
PGHW45HB									179.8	128.8																	125.3	191.85	3.69	
PGHW55CB	70	13	43.5	140	106	116	12	95	172.7	117.7	26	12.9	11	8.5	Ø14	12	19	18.5	17.5	26.5	17	53	44	M14x25	120	30	153.2	211.23	4.52	14.92
PGHW55HB									210.8	155.8																	184.9	276.23	5.96	

Note: 1 kgf = 9.81N

(4) PGHW-CC/ PGHW-HC

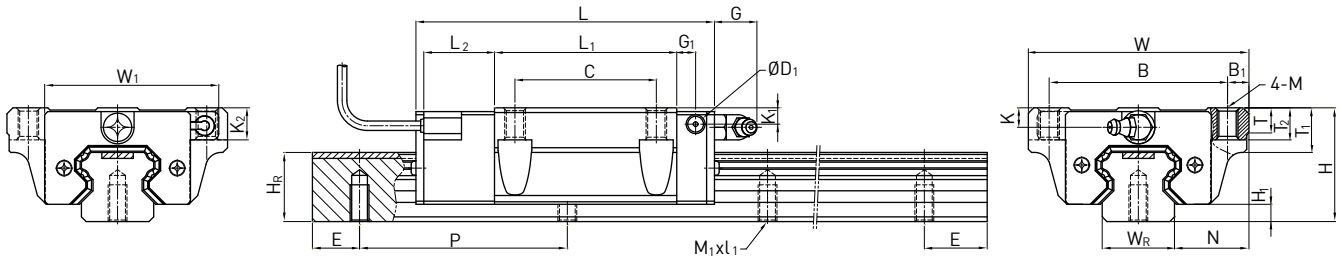

Model No.	Dimensions of Assembly (mm)			Dimensions of Block (mm)																		Dimensions of Rail (mm)					Basic Dynamic Load Rating	Basic Static Load Rating	Weight	
																													Block	Rail
	H	H_1	N	W	W_1	B	B_1	C	L	L_1	L_2	G	G_1	D_1	M	K	K_1	K_2	T	T_1	T_2	W_R	H_R	M_1xl_1	P	E	C(kN)	C_0 (kN)	kg	kg/m
PGHW20CC	30	4.6	21.5	63	52	53	5	40	90.5	50.5	25	12	6	5	M6	6	6	10	8	10	9.5	20	17.5	M6x10	60	20	27.1	36.68	0.40	2.05
PGHW20HC									105.2	65.2																	32.7	47.96	0.52	
PGHW25CC	36	5.5	23.5	70	55.4	57	6.5	45	95	58	22.5	12	6	5	M8	6	5	10	8	14	10	23	22	M6x12	60	20	34.9	52.82	0.59	3.05
PGHW25HC									116	78.6																	42.2	69.07	0.80	
PGHW30CC	42	6	31	90	67	72	9	52	110	70	23	12	6	5	M10	6.5	10.8	16	8.5	16	10	28	26	M8x15	80	20	48.5	71.87	1.09	4.31
PGHW30HC									133	93																	58.6	93.99	1.44	
PGHW35CC	48	7.5	33	100	77	82	9	62	123	80	23.4	12	7	5	M10	9	12.6	16.5	10.1	18	13	34	29	M8x17	80	20	64.6	93.88	1.56	6.14
PGHW35HC									148.8	105.8																	77.9	122.77	2.06	
PGHW45CC	60	9.5	37.5	120	91	100	10	80	148	97	24.5	12.9	10	8.5	M12	8.5	20	20	15.1	22	15	45	38	M12x24	105	22.5	103.8	146.71	2.79	10.25
PGHW45HC									179.8	128.8																	125.3	191.85	3.69	
PGHW55CC	70	13	43.5	140	106	116	12	95	172.7	117.7	26	12.9	11	8.5	M14	12	19	18.5	17.5	26.5	17	53	44	M14x25	120	30	153.2	211.23	4.52	14.92
PGHW55HC									210.8	155.8																	184.9	276.23	5.96	

Note: 1 kgf = 9.81N

PG Type

Positioning Guideway

(5) PGHL-CA / PGHL-HA

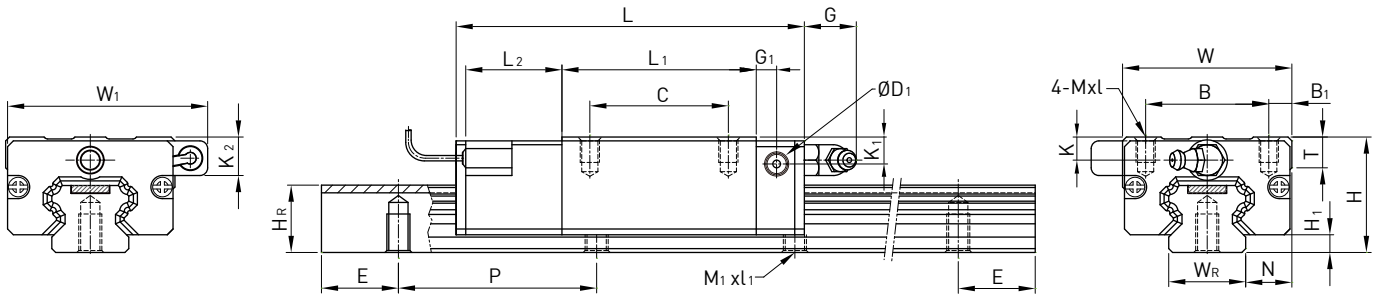

Model No.	Dimensions of Assembly (mm)			Dimensions of Block (mm)																Dimensions of Rail (mm)					Basic Dynamic Load Rating	Basic Static Load Rating	Weight	
																											Block	Rail
	H	H_1	N	W	W_1	B	B_1	C	L	L_1	L_2	G	G_1	D_1	K	K_1	K_2	Mxl	T	W_R	H_R	M_1xl_1	P	E	C(kN)	C_0 (kN)	kg	kg/m
PGHL25CA	36	5.5	12.5	48	55.4	35	6.5	35	95	58	22.5	12	6	5	6	9	14	M6x6	8	23	22	M6x12	60	20	34.9	52.82	0.51	3.05
PGHL25HA								50	116	78.6															42.2	69.07	0.69	
PGHL30CA	42	6	16	60	67	40	10	40	110	70	23	12	6	5	6.5	10.8	16	M8x10	8.5	28	26	M8x15	80	20	48.5	71.87	0.88	4.31
PGHL30HA								60	133	93															58.6	93.99	1.16	
PGHL35CA	48	7.5	18	70	77	50	10	50	123	80	23.4	12	7	5	9	12.6	16.5	M8x12	10.2	34	29	M8x17	80	20	64.6	93.88	1.45	6.14
PGHL35HA								72	148.8	105.8															77.9	122.77	1.92	
PGHL45CA	60	9.5	20.5	86	91	60	13	60	148	97	24.5	12.9	10	8.5	8.5	20.5	20.5	M10x17	16	45	38	M12x24	105	22.5	103.8	146.71	2.73	10.25
PGHL45HA								80	179.8	128.8															125.3	191.85	3.61	
PGHL55CA	70	13	23.5	100	106	75	12.5	75	172.7	117.7	26	12.9	11	8.5	12	19	18.5	M12x18	17.5	53	44	M14x25	120	30	153.2	211.23	4.17	14.92
PGHL55HA								95	210.8	155.8															184.9	276.23	5.49	

Note: 1 kgf = 9.81N

(6) Dimensions for PGHR-R (Rail Mounting from Top)

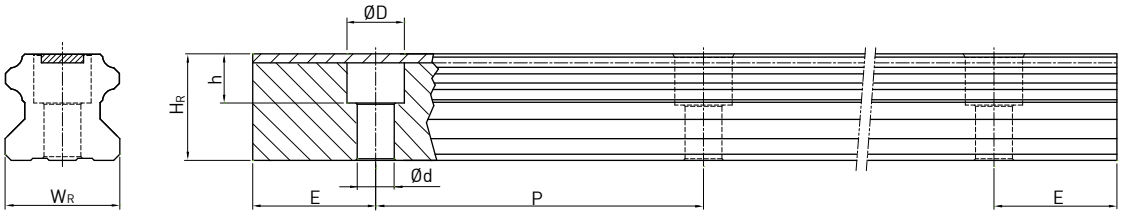

Model No.	Dimensions of Rail (mm)							Mounting Bolt for Rail	Weight
	WR	HR	D	h	d	P	E	(mm)	(kg/m)
PGH20R	20	17.5	9.5	8.5	6	60	20	M5×16	2.05
PGH25R	23	22	11	9	7	60	20	M6×20	3.05
PGH30R	28	26	14	12	9	80	20	M8×25	4.31
PGH35R	34	29	14	12	9	80	20	M8×25	6.14
PGH45R	45	38	20	17	14	105	22.5	M12×35	10.25
PGH55R	53	44	23	20	16	120	30	M14×45	14.92

SE Type

Metallic End Cap

2-15 SE Type - Metal End Cap Linear Guideway

2-15-1 General Information

(1) Features

- Use of Metallic parts; (if end seal is needed, the high-temperature rubber in end seal is available).
- Excellent temperature resistance; service temperature under 150 °C.

(2) Applications

- Heat treatment equipment,
- Applications using vacuums (no vapor dispersion from plastic or rubber)
- Welding equipment.

2-15-2 Structure

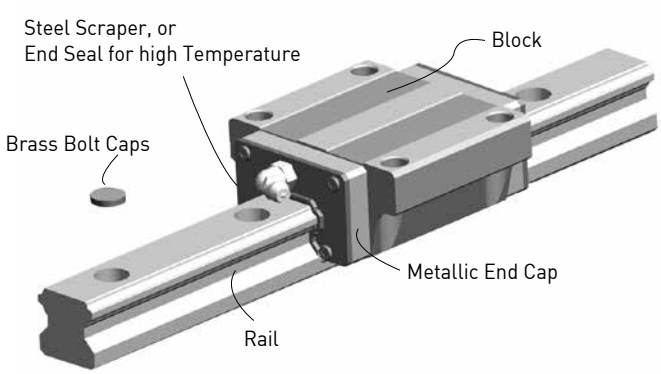

2-15-3 Specification

(1) Add "/ SE" after the specification of linear guideway

Ex. HGW25CA2R1000Z0PII + ZZ / SE

2-15-4 Dimensions of Bolt Cap

Table 2-15-1 Dimensions of Copper Bolt Cap

Item	Bolt Size	Diameter (mm)		Item	Bolt Size	Diameter (mm)	
		D	H			D	H
C3-C	M3	6.15	1.2	C8-C	M8	14.15	3.5
C4-C	M4	7.65	1.2	C12-C	M12	20.15	4
C5-C	M5	9.65	2.5	C14-C	M14	23.15	4
C6-C	M6	11.15	2.8	C16-C	M16	26.15	4

Table 2-15-2 Dimensions of Stainless Bolt Cap

Item	Bolt Size	Diameter (mm)		Item	Bolt Size	Diameter (mm)	
		D	H			D	H
C3-S	M3	6.15	1.2	C8-S	M8	14.22	3.5
C4-S	M4	7.65	1.2	C12-S	M12	20.25	4
C5-S	M5	9.65	2.5	C14-S	M14	23.25	4
C6-S	M6	11.22	2.8	C16-S	M16	26.20	4

2-16 Stainless Steel Linear Guideway

2-16-1 Features

(1) Same features as standard linear guideway

- Stiffness, Hardness, Service Life, Dimensions remain the same

(2) Suitable for specific extreme environments

- With metal components, it can be used in low and medium vacuum environments

(3) Great corrosion resistance

-Block, Rail, Steel Balls, Grease nipple, Screws are all made of stainless steel material

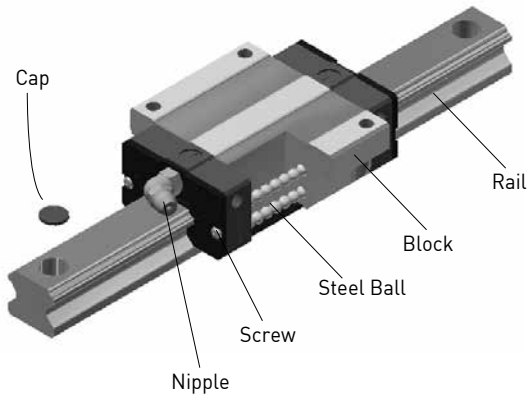

Note: 1. Currently available in HG15C、HG20C、HG25C、EG15C
2. Maximum length available is 2000mm
3. Add "/M" after the specification of linear guideway
Ex. HGW25CA2R1600ZAPII /M

2-16-2 Suitable for below environments

- Chemicals
- Humid

2-16-3 Main Applications

- Food processing, transportation and storage
- Liquid and gas processing equipment
- Vacuum equipment
- Cleanroom equipment

Salt Spray Test		
	Stainless Steel Series	Regular Series
Before		
After	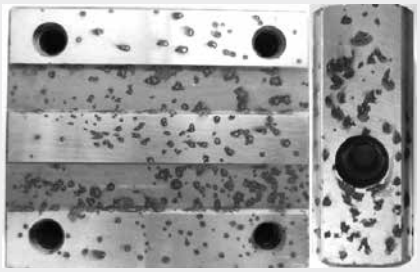	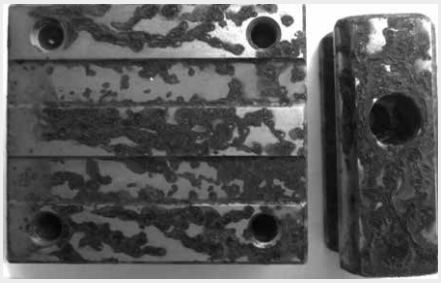
Result	Slight Corrosion	Severe Corrosion

Note: Test conditions: -Salt Solution: 5 % NaCl
-Salt spray chamber temperature: 35˚C±2˚C
-Pressure: 1 bar

RC Type

Reinforced Cap

2-17 RC Type - Reinforced Cap

The RC Reinforced Cap consists of a piece of hard plastic and a piece of an elastic O-ring.
The hard plastic is made of synthetic resin which is characterized by oil resistance and abrasion resistance; the O-ring is made of rubber which is characterized by oil resistance and elasticity. The structure is shown on the illustration to the right.

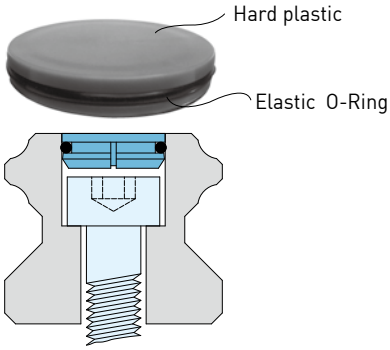

2-17-1 Features of the Reinforced Cap

(1) Absorb the machining error
The elastic O-ring can eliminate some of the machining error caused during the creation of the mounting holes by maintaining the tight fit between the cap and the mounting hole.

(2) Vibration and shock resistance
The elastic O-ring can prevent the cap from loosening by absorbing the vibrations caused by external forces acting on the guideways.

(3) High performance dust protection
The reinforced cap is designed with an elastic O-ring to contact the mounting hole perfectly by eliminating the clearance between the cap and the mounting hole resulting in excellent dust protection.

(4) Service life prolongation
The service life of the guideway increases due to the smoothness of the rail surface after installation of the Reinforced Cap preventing any damage to the end seals during operation.

2-17-2 Specification

(1) Non-interchangeable type - Add "+RC" after the specification of the linear guideway
Ex. HGW25CC2R1600ZAPII+ZZ+RC

(2) Interchangeable type -Add "+RC" after the specification of the linear guideway
EX. HGR25R1600P +RC

2-17-3 Dimensions of Reinforced Cap

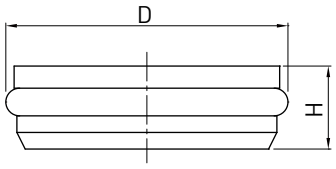

Model Number	Bolt Size	Diameter (mm)		Rail size					
		D	H	HGR	EGR	WER	MGNR	RGR	CRG
RC3	M3	6.15	1.3		15		12, 15		
RC4	M4	7.65	1.1	15	15U	17, 21, 27		15	15
RC5	M5	9.8	3	20	20			20	20
RC6	M6	11.4	2.8	25	25, 30	35		25	25
RC8	M8	14.6	3.5	30, 35	35, 30U			30, 35	30, 35
RC12	M12	20.5	4	45				45	
RC14	M14	23.5	5	55				55	
RC16	M16	26.6	5	65				65	

2-18 Grease

2-18-1 Grease Gun Unit

HIWIN offers different capacities and packages for grease gun reload, depending on various requirements. The grease gun could not only be equipped with normal grease nozzle, but also be replaced with other nozzles for other kinds of grease nipples.

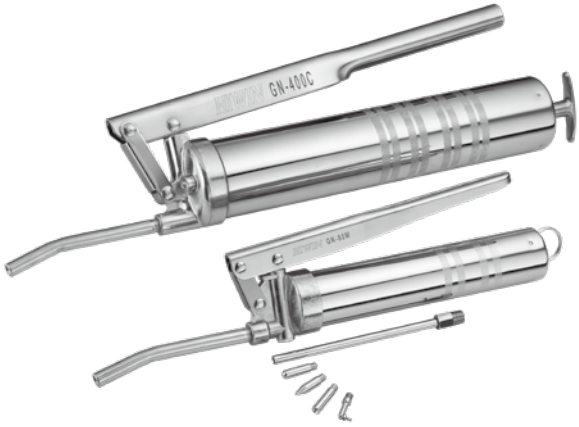

Grease Nipple : M6, PT1/8

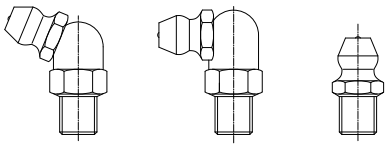

Table 2-18-1

Model no.	GN-80M	GN-400C
Dimen-sion	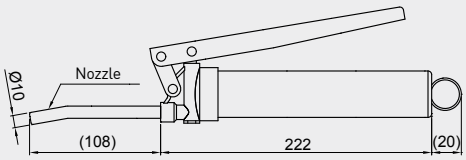	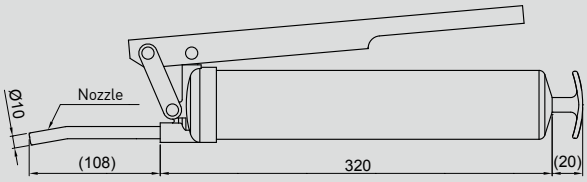
Spec.	1. Working pressure: 15 MPa 2. Output: 0.5~0.6 c.c./Stroke 3. Weight: 520 g (grease excluded) 4. Grease reload: 70 g flexible tube or 120 ml bulk loading	1. Working pressure: 15 MPa 2. Output: 0.8~0.9 c.c./Stroke 3. Weight: 1150 g (grease excluded) 4. Grease reload: 14 o.z. cartridge pipe or 400 ml bulk loading

Grease

2-18-2 Grease Nozzle Kit (Model no. GNZ-05-BOX)

HIWIN grease nozzle kit with various nozzles offers grease reload for different kinds of grease nipples.

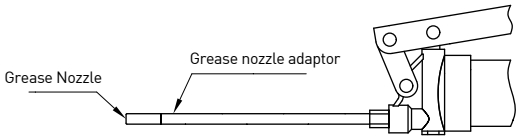

Table 2-18-2 **Grease Nozzle Adaptor**

Model no.	Dimensions
GT-PT1/8-M5	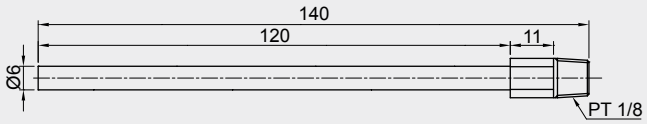

Table 2-18-3 **Grease Nozzle**

Model no.	Dimensions	Lubricating Type
GNZ-L-M5	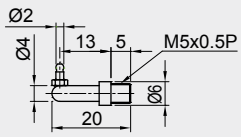	Minimized grease hole
GNZ-P-M5	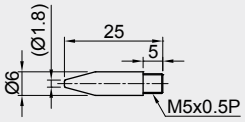	Minimized grease hole
GNZ-R-M5	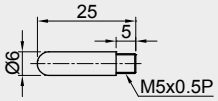	Dent nipple (DIN3405)
GNZ-C-M5	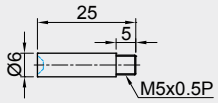	Nipple (M3, M4 thread) 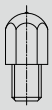

2-18-3 Grease

HIWIN offers various lubricants for environment such as general type, heavy load, low particle emitting, high speed, etc. According to the ways of grease reload, choices for different capacities and packages of grease are available.

Packing :70g Flexible tube, 400g Pipe, 1kg Can

HIWIN G01Grease of Heavy-loading

Features:

1. Excellent wear and pressure resistance under heavy load condition
2. Low friction in low temperatures
3. Water resistant
4. Available for central lubrication system

Basic Properties :

Color		Light yellow
Base Oil		Mineral oil
Consistency Enhancer		Polyurea
Additive		Solid lubricant
Service Temperature (℃)		-15~115
NLGI-grade (0.1mm)		310-340
Viscosity (cst)	40℃	500
	100℃	30
Drop Point (℃)		> 170

HIWIN G02 Grease of Low Particle-emitting

Features:

1. Low particle emitting rate and suitable for clean room environment
2. Wear resistant
3. For long term usage and wide temperature range
4. Consisting of synthetic hydrocarbon oil and special calcium soap, also resistant to oxidation and corrosion

Basic Properties:

Color		Beige
Base Oil		Synthetic hydrocarbon oil
Consistency Enhancer		Special calcium soap
Service Temperature(℃)		-30~140
NLGI-grade (0.1mm)		265-295
Viscosity (cst)	40℃	100
	100℃	15
Drop Point (℃)		> 180

HIWIN G03 Grease of Low Particle-emitting (High Speed)

Features:

1. Low particle emitting rate and suitable for clean room environment
2. Wear resistant
3. For long term usage and wear resistance under high speed condition

Basic Properties:

Color		Beige
Base Oil		Synthetic hydrocarbon oil
Consistency Enhancer		Special calcium soap
Service Temperature (℃)		-45~125
NLGI-grade (0.1mm)		265-295
Viscosity (cst)	40℃	30
	100℃	5.9
Drop Point(℃)		> 210

HIWIN G04 Grease of High Speed

Features:

1. Wear resistant under high speed condition
2. Low friction under high speed condition
3. Water resistant

Basic Properties:

Color		Beige
Base Oil		Ester/PAO
Consistency Enhancer		Lithium soap
Service Temperature (℃)		-35~120
NLGI-grade (0.1mm)		260-280
Viscosity (cst)	40℃	25
	100℃	6
Drop Point(℃)		> 225

Grease

HIWIN G05 Grease of General Type

Features:

1. Wear resistance
2. Low friction resistance
3. Long-life
4. Low oxidation tendency
5. Water resistant
6. Corrosion resistant

Basic Properties:

Color		Brown
Base Oil		Mineral
Consistency Enhancer		Lithium Soap
Service Temperature (℃)		-15~120
NLGI-grade (0.1mm)		270-285
Viscosity (cst)	40℃	200
Drop Point(℃)		190

HIWIN G06 Grease for High Frequency or Short-stroke Condition

Features:

1. Well wear resistance under high frequency(1.5~3G) or short-stroke condition.
2. Long term grease, suitable for wide temperature range
3. Can be used in plastic/steel and plastic/plastic components, compatible with elastomers and plastic materials

Basic Properties:

Color		Beige
Base Oil		PAO
Consistency Enhancer		Special lithium soap
Service Temperature (℃)		-45~130
NLGI-grade (0.1mm)		265-295
Viscosity (cst)	40℃	32
	100℃	6
Drop Point(℃)		190

HIWIN G07 Grease for Low Temperature Condition

Features:

1. For low temperature condition: -50℃ to 0℃.
2. Low starting and running torques particularly at low temperatures

Basic Properties:

Color		Beige
Base Oil		Mineral
Consistency Enhancer		Lithium- calcium soap
Service Temperature (℃)		-50~80
NLGI-grade (0.1mm)		310-340
Viscosity (cst)	40℃	14
	100℃	3

3. HIWIN Linear Guideway Inquiry Form

Customer:				Date:
Tel.	Fax.			Confirm by
Machine Type				Drawing No.
Axis	☐ X ☐ Y ☐ Z ☐ Other ( )			
Install Position	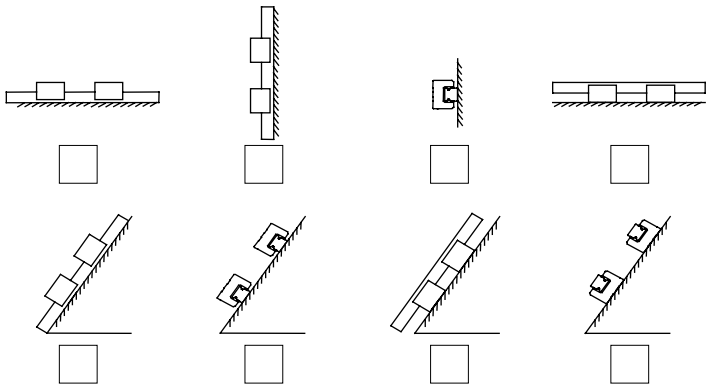			
Model No.				
Rail Mounting	☐ R (from top)	☐ T (from bottom)	☐ U (from top with bolt hole enlarged)	
Dust Protection	☐ Double end seal + Bottom seal (DD) ☐ End seal + Scraper + Bottom seal (ZZ)	☐ Double end seal + Scraper + Bottom seal (KK) ☐ End seal + Bottom seal (U)		
Special Option	☐ Steel end cap (SE)	☐ Self Lubrication (E2)		
Lubrication	☐ Grease nipple (Grease)	☐ Piping joint (Oil)	☐ Other	
Butt-joint	☐ No	☐ Yes		
No. of Rail Per Axis	☐ I (1)	☐ II (2)	☐ III (3)	☐ Other
Reference Surface and Grease Nipple Orientation	Please mark "X "in the ☐ to indicate the grease nipple orientation. 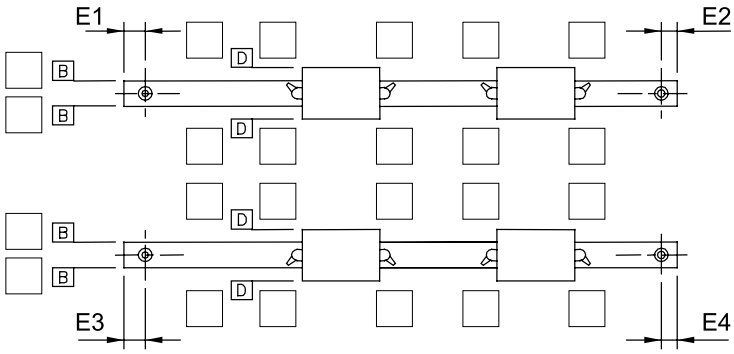 ☐ E1 ☐ E2 ☐ E3 ☐ E4			

MEMO

Linear Guideway Technical Information

Publication Date：November 1998, first edition
Print Date：March 2022, 23rd edition

1. HIWIN is a registered trademark of HIWIN Technologies Corp.. For your protection, avoid buying counterfeit products from unknown sources.
2. Actual products may differ from specifications and photos provided in this catalog. These differences may be the result of various factors including product improvements.
3. HIWIN website for patented product directory: http://www.hiwin.tw/Products/Products_patents.aspx
4. HIWIN will not sell or export products or processes restricted under the "Foreign Trade Act" or related regulations. Export of restricted products should be approved by proper authorities in accordance with relevant laws and shall not be used to manufacture or develop nuclear, biochemical, missiles or other weapons.

Copyright © HIWIN Technologies Corp.

HIWIN®

Global Sales And Customer Service Site

HIWIN GmbH
OFFENBURG, GERMANY
www.hiwin.de
www.hiwin.eu
info@hiwin.de

HIWIN Schweiz GmbH
JONA, SWITZERLAND
www.hiwin.ch
info@hiwin.ch

HIWIN KOREA
SUWON · CHANGWON, KOREA
www.hiwin.kr
info@hiwin.kr

HIWIN JAPAN
KOBE · TOKYO · NAGOYA · NAGANO · TOHOKU · SHIZUOKA · HOKURIKU · HIROSHIMA · FUKUOKA · KUMAMOTO, JAPAN
www.hiwin.co.jp
info@hiwin.co.jp

HIWIN s.r.o.
BRNO, CZECH REPUBLIC
www.hiwin.cz
info@hiwin.cz

HIWIN CHINA
SUZHOU, CHINA
www.hiwin.cn
info@hiwin.cn

HIWIN USA
CHICAGO, U.S.A.
www.hiwin.us
info@hiwin.com

HIWIN FRANCE
STRASBOURG, FRANCE
www.hiwin.fr
info@hiwin.de

Mega-Fabs Motion Systems, Ltd.
HAIFA, ISRAEL
www.mega-fabs.com
info@mega-fabs.com

HIWIN Srl
BRUGHERIO, ITALY
www.hiwin.it
info@hiwin.it

HIWIN SINGAPORE
SINGAPORE
www.hiwin.sg
info@hiwin.sg

HIWIN TECHNOLOGIES CORP.
No. 7, Jingke Road,
Taichung Precision Machinery Park,
Taichung 40852, Taiwan
Tel: +886-4-23594510
Fax: +886-4-23594420
www.hiwin.tw
www.hiwinsupport.com
business@hiwin.tw

The specifications in this catalog are subject to change without notification.

Copyright © HIWIN Technologies Corp.
©2022 FORM G99TE23-2209 (PRINTED IN TAIWAN)